Data sheet

BMP280
Digital Pressure Sensor

Bosch Sensortec

BMP280: Data sheet

Document revision	1.14
Document release date	May 5th, 2015
Document number	BST-BMP280-DS001-11
Technical reference code(s)	0273 300 416
Notes	Data in this document are subject to change without notice. Product photos and pictures are for illustration purposes only and may differ from the real product's appearance.

BMP280

DIGITAL PRESSURE SENSOR

Key parameters

• Pressure range	300 … 1100 hPa (equiv. to +9000…-500 m above/below sea level)
• Package	8-pin LGA metal-lid Footprint : 2.0 × 2.5 mm², height: 0.95 mm
• Relative accuracy (950 … 1050hPa @25°C)	±0.12 hPa, equiv. to ±1 m
• Absolute accuracy (950 …1050 hPa, 0 …+40 °C)	typ. ±1 hPa
• Temperature coefficient offset (25 … 40°C @900hPa)	1.5 Pa/K, equiv. to 12.6 cm/K
• Digital interfaces	I²C (up to 3.4 MHz) SPI (3 and 4 wire, up to 10 MHz)
• Current consumption	2.7µA @ 1 Hz sampling rate
• Temperature range	-40 … +85 °C
• RoHS compliant, halogen-free	
• MSL 1	

Typical applications

- Enhancement of GPS navigation
  (e.g. time-to-first-fix improvement, dead-reckoning, slope detection)
- Indoor navigation (floor detection, elevator detection)
- Outdoor navigation, leisure and sports applications
- Weather forecast
- Health care applications (e.g. spirometry)
- Vertical velocity indication (e.g. rise/sink speed)

Target devices

- Handsets such as mobile phones, tablet PCs, GPS devices
- Navigation systems
- Portable health care devices
- Home weather stations
- Flying toys
- Watches

© Bosch Sensortec GmbH reserves all rights even in the event of industrial property rights. We reserve all rights of disposal such as copying and passing on to third parties. BOSCH and the symbol are registered trademarks of Robert Bosch GmbH, Germany.
Note: Specifications within this document are subject to change without notice. Not intended for publication.

General Description

Robert Bosch is the world market leader for pressure sensors in automotive and consumer applications. Bosch's proprietary APSM (Advanced Porous Silicon Membrane) MEMS manufacturing process is fully CMOS compatible and allows a hermetic sealing of the cavity in an all silicon process. The BMP280 is based on Bosch's proven Piezo-resistive pressure sensor technology featuring high EMC robustness, high accuracy and linearity and long term stability.

The BMP280 is an absolute barometric pressure sensor especially designed for mobile applications. The sensor module is housed in an extremely compact 8-pin metal-lid LGA package with a footprint of only 2.0 × 2.5 mm^2 and 0.95 mm package height. Its small dimensions and its low power consumption of 2.7 µA @1Hz allow the implementation in battery driven devices such as mobile phones, GPS modules or watches.

As the successor to the widely adopted BMP180, the BMP280 delivers high performance in all applications that require precise pressure measurement. The BMP280 operates at lower noise, supports new filter modes and an SPI interface within a footprint 63% smaller than the BMP180.

The emerging applications of in-door navigation, health care as well as GPS refinement require a high relative accuracy and a low TCO at the same time. BMP180 and BMP280 are perfectly suitable for applications like floor detection since both sensors feature excellent relative accuracy is ±0.12 hPa, which is equivalent to ±1 m difference in altitude. The very low offset temperature coefficient (TCO) of 1.5 Pa/K translates to a temperature drift of only 12.6 cm/K.
Please contact your regional Bosch Sensortec partner for more information about software packages enhancing the calculation of the altitude given by the BMP280 pressure reading.

Table 1: Comparison between BMP180 and BMP280

Parameter	BMP180	BMP280
Footprint	3.6 × 3.8 mm	2.0 × 2.5 mm
Minimum V_{DD}	1.80 V	1.71 V
Minimum V_{DDIO}	1.62 V	1.20 V
Current consumption @3 Pa RMS noise	12 µA	2.7 µA
RMS Noise	3 Pa	1.3 Pa
Pressure resolution	1 Pa	0.16 Pa
Temperature resolution	0.1°C	0.01°C
Interfaces	I²C	I²C & SPI (3 and 4 wire, mode '00' and '11')
Measurement modes	Only P or T, forced	P&T, forced or periodic
Measurement rate	up to 120 Hz	up to 157 Hz
Filter options	None	Five bandwidths

© Bosch Sensortec GmbH reserves all rights even in the event of industrial property rights. We reserve all rights of disposal such as copying and passing on to third parties. BOSCH and the symbol are registered trademarks of Robert Bosch GmbH, Germany.
Note: Specifications within this document are subject to change without notice. Not intended for publication.

Index of Contents

1. SPECIFICATION 7

2. ABSOLUTE MAXIMUM RATINGS 9

3. FUNCTIONAL DESCRIPTION 10

3.1 BLOCK DIAGRAM 11

3.2 POWER MANAGEMENT 11

3.3 MEASUREMENT FLOW 11

3.3.1 PRESSURE MEASUREMENT 12
3.3.2 TEMPERATURE MEASUREMENT 13
3.3.3 IIR FILTER 13

3.4 FILTER SELECTION 14

3.5 NOISE 15

3.6 POWER MODES 15

3.6.1 SLEEP MODE 16
3.6.2 FORCED MODE 16
3.6.3 NORMAL MODE 16
3.6.4 MODE TRANSITION DIAGRAM 17

3.7 CURRENT CONSUMPTION 18

3.8 MEASUREMENT TIMINGS 18

3.8.1 MEASUREMENT TIME 18
3.8.2 MEASUREMENT RATE IN NORMAL MODE 19

3.9 DATA READOUT 19

3.10 DATA REGISTER SHADOWING 20

3.11 OUTPUT COMPENSATION 20

3.11.1 COMPUTATIONAL REQUIREMENTS 20
3.11.2 TRIMMING PARAMETER READOUT 21
3.11.3 COMPENSATION FORMULA 21

3.12 CALCULATING PRESSURE AND TEMPERATURE 22

4. GLOBAL MEMORY MAP AND REGISTER DESCRIPTION 24

4.1 GENERAL REMARKS 24

4.2 MEMORY MAP 24

4.3 REGISTER DESCRIPTION 24

4.3.1 REGISTER 0XD0 *"ID"* 24
4.3.2 REGISTER 0XE0 *"RESET"* 24
4.3.3 REGISTER 0XF3 *"STATUS"* 25
4.3.4 REGISTER 0XF4 *"CTRL_MEAS"* 25
4.3.5 REGISTER 0XF5 *"CONFIG"* 26
4.3.6 REGISTER 0XF7…0XF9 *"PRESS" (_MSB, _LSB, _XLSB)* 26
4.3.7 REGISTER 0XFA…0XFC *"TEMP" (_MSB, _LSB, _XLSB)* 27

© Bosch Sensortec GmbH reserves all rights even in the event of industrial property rights. We reserve all rights of disposal such as copying and passing on to third parties. BOSCH and the symbol are registered trademarks of Robert Bosch GmbH, Germany.
Note: Specifications within this document are subject to change without notice. Not intended for publication.

5. DIGITAL INTERFACES 28
5.1 INTERFACE SELECTION 28
5.2 I²C INTERFACE 28
5.2.1 I²C WRITE 29
5.2.2 I²C READ 29
5.3 SPI INTERFACE 30
5.3.1 SPI WRITE 31
5.3.2 SPI READ 31
5.4 INTERFACE PARAMETER SPECIFICATION 32
5.4.1 GENERAL INTERFACE PARAMETERS 32
5.4.2 I²C TIMINGS 32
5.4.3 SPI TIMINGS 33
6. PIN-OUT AND CONNECTION DIAGRAM 35
6.1 PIN-OUT 35
6.2 CONNECTION DIAGRAM 4-WIRE SPI 36
6.3 CONNECTION DIAGRAM 3-WIRE SPI 37
6.4 CONNECTION DIAGRAM I^2C 38
7. PACKAGE, REEL AND ENVIRONMENT 39
7.1 OUTLINE DIMENSIONS 39
7.2 LANDING PATTERN RECOMMENDATION 40
7.3 MARKING 41
7.3.1 MASS PRODUCTION DEVICES 41
7.3.2 ENGINEERING SAMPLES 41
7.4 SOLDERING GUIDELINES 42
7.5 TAPE AND REEL SPECIFICATION 43
7.5.1 DIMENSIONS 43
7.5.2 ORIENTATION WITHIN THE REEL 43
7.6 MOUNTING AND ASSEMBLY RECOMMENDATIONS 44
7.7 ENVIRONMENTAL SAFETY 44
7.7.1 ROHS 44
7.7.2 HALOGEN CONTENT 44
7.7.3 INTERNAL PACKAGE STRUCTURE 44
8. APPENDIX 1: COMPUTATION FORMULAE FOR 32 BIT SYSTEMS 44
8.1 COMPENSATION FORMULA IN FLOATING POINT 44
8.2 COMPENSATION FORMULA IN 32 BIT FIXED POINT 45
9. LEGAL DISCLAIMER 47
9.1 ENGINEERING SAMPLES 47

© Bosch Sensortec GmbH reserves all rights even in the event of industrial property rights. We reserve all rights of disposal such as copying and passing on to third parties. BOSCH and the symbol are registered trademarks of Robert Bosch GmbH, Germany.
Note: Specifications within this document are subject to change without notice. Not intended for publication.

9.2 PRODUCT USE 47
9.3 APPLICATION EXAMPLES AND HINTS 47

10. DOCUMENT HISTORY AND MODIFICATION 48

© Bosch Sensortec GmbH reserves all rights even in the event of industrial property rights. We reserve all rights of disposal such as copying and passing on to third parties. BOSCH and the symbol are registered trademarks of Robert Bosch GmbH, Germany.
Note: Specifications within this document are subject to change without notice. Not intended for publication.

1. Specification

If not stated otherwise,

- All values are valid over the full voltage range
- All minimum/maximum values are given for the full accuracy temperature range
- Minimum/maximum values of drifts, offsets and temperature coefficients are ±3σ values over lifetime
- Typical values of currents and state machine timings are determined at 25 °C
- Minimum/maximum values of currents are determined using corner lots over complete temperature range
- Minimum/maximum values of state machine timings are determined using corner lots over 0…+65 °C temperature range

The specification tables are split into pressure and temperature part of BMP280

Table 2: Parameter specification

Parameter	Symbol	Condition	Min	Typ	Max	Units
Operating temperature range	T_A	operational	-40	25	+85	°C
		full accuracy	0		+65	
Operating pressure range	P	full accuracy	300		1100	hPa
Sensor supply voltage	V_{DD}	ripple max. 50mVpp	1.71	1.8	3.6	V
Interface supply voltage	V_{DDIO}		1.2	1.8	3.6	V
Supply current	$I_{DD,LP}$	1 Hz forced mode, pressure and temperature, lowest power		2.8	4.2	µA
Peak current	I_{peak}	during pressure measurement		720	1120	µA
Current at temperature measurement	I_{DDT}			325		µA
Sleep current[1]	I_{DDSL}	25 °C		0.1	0.3	µA
Standby current (inactive period of normal mode) [2]	I_{DDSB}	25 °C		0.2	0.5	µA
Relative accuracy pressure V_{DD} = 3.3V	A_{rel}	700 … 900hPa 25 . . . 40 °C		±0.12		hPa
				±1.0		m

[1] Typical value at VDD = VDDIO = 1.8 V, maximal value at VDD = VDDIO = 3.6 V.
[2] Typical value at VDD = VDDIO = 1.8 V, maximal value at VDD = VDDIO = 3.6 V.

© Bosch Sensortec GmbH reserves all rights even in the event of industrial property rights. We reserve all rights of disposal such as copying and passing on to third parties. BOSCH and the symbol are registered trademarks of Robert Bosch GmbH, Germany.
Note: Specifications within this document are subject to change without notice. Not intended for publication.

Offset temperature coefficient	TCO	900hPa 25 . . . 40 °C		±1.5		Pa/K
				12.6		cm/K
Absolute accuracy pressure	A^P_{ext}	300 . . . 1100 hPa -20 . . . 0 °C		±1.7		hPa
	A^P_{full}	300 . . . 1100 hPa 0 . . . 65 °C		±1.0		hPa
Resolution of output data in ultra high resolution mode	R^P	Pressure		0.0016		hPa
	R^T	Temperature		0.01		°C
Noise in pressure	$V_{p,full}$	Full bandwidth, ultra high resolution See chapter 3.5		1.3		Pa
				11		cm
	$V_{p,filtered}$	Lowest bandwidth, ultra high resolution See chapter 3.5		0.2		Pa
				1.7		cm
Absolute accuracy temperature[3]	A^T	@ 25 °C		±0.5		°C
		0 . . . +65 °C		±1.0		°C
PSRR (DC)	PSRR	full V_{DD} range			±0.005	Pa/ mV
Long term stability[4]	ΔP_{stab}	12 months		±1.0		hPa
Solder drifts		Minimum solder height 50 µm	-0.5		+2	hPa
Start-up time	$t_{startup}$	Time to first communication after both V_{DD} > 1.58V and V_{DDIO} > 0.65V			2	ms
Possible sampling rate	f_{sample}	*osrs_t* = *osrs_p* = 1; See chapter 3.8	157	182	tbd[5]	Hz
Standby time accuracy	$\Delta t_{standby}$			±5	±25	%

[3] Temperature measured by the internal temperature sensor. This temperature value depends on the PCB temperature, sensor element self-heating and ambient temperature and is typically above ambient temperature.
[4] Long term stability is specified in the full accuracy operating pressure range 0 … 65°C
[5] Depends on application case, please contact Application Engineer for further questions

© Bosch Sensortec GmbH reserves all rights even in the event of industrial property rights. We reserve all rights of disposal such as copying and passing on to third parties. BOSCH and the symbol are registered trademarks of Robert Bosch GmbH, Germany.
Note: Specifications within this document are subject to change without notice. Not intended for publication.

2. Absolute maximum ratings

The absolute maximum ratings are provided in Table 3.

Table 3: Absolute maximum ratings

Parameter	Condition	Min	Max	Unit
Voltage at any supply pin	V_{DD} and V_{DDIO} Pin	-0.3	4.25	V
Voltage at any interface pin		-0.3	V_{DDIO} + 0.3	V
Storage Temperature	≤ 65% rel. H.	-45	+85	°C
Pressure		0	20 000	hPa
ESD	HBM, at any Pin		±2	kV
	CDM		±500	V
	Machine model		±200	V

© Bosch Sensortec GmbH reserves all rights even in the event of industrial property rights. We reserve all rights of disposal such as copying and passing on to third parties. BOSCH and the symbol are registered trademarks of Robert Bosch GmbH, Germany.
Note: Specifications within this document are subject to change without notice. Not intended for publication.

3. Functional description

The BMP280 consists of a Piezo-resistive pressure sensing element and a mixed-signal ASIC. The ASIC performs A/D conversions and provides the conversion results and sensor specific compensation data through a digital interface.

BMP280 provides highest flexibility to the designer and can be adapted to the requirements regarding accuracy, measurement time and power consumption by selecting from a high number of possible combinations of the sensor settings.

BMP280 can be operated in three power modes (see chapter 3.6):

- sleep mode
- normal mode
- forced mode

In sleep mode, no measurements are performed. Normal mode comprises an automated perpetual cycling between an active measurement period and an inactive standby period. In forced mode, a single measurement is performed. When the measurement is finished, the sensor returns to sleep mode.

A set of oversampling settings is available ranging from ultra low power to ultra high resolution setting in order to adapt the sensor to the target application. The settings are predefined combinations of pressure measurement oversampling and temperature measurement oversampling. Pressure and temperature measurement oversampling can be selected independently from 0 to 16 times oversampling (see chapter 3.3.1 and 3.3.2):

- Temperature measurement
- Ultra low power
- Low power
- Standard resolution
- High resolution
- Ultra high resolution

BMP280 is equipped with a built-in IIR filter in order to minimize short-term disturbances in the output data caused by the slamming of a door or window. The filter coefficient ranges from 0 (off) to 16.

In order to simplify the device usage and reduce the high number of possible combinations of power modes, oversampling rates and filter settings, Bosch Sensortec provides a proven set of recommendations for common use-cases in smart-phones, mobile weather stations or flying toys (see chapter 3.4):

- Handheld device low-power (e.g. smart phones running Android)
- Handheld device dynamic (e.g. smart phones running Android)
- Weather monitoring (setting with lowest power consumption)
- Elevator / floor change detection
- Drop detection
- Indoor navigation

© Bosch Sensortec GmbH reserves all rights even in the event of industrial property rights. We reserve all rights of disposal such as copying and passing on to third parties. BOSCH and the symbol are registered trademarks of Robert Bosch GmbH, Germany.
Note: Specifications within this document are subject to change without notice. Not intended for publication.

3.1 Block diagram

Figure 1 shows a simplified block diagram of the BMP280:

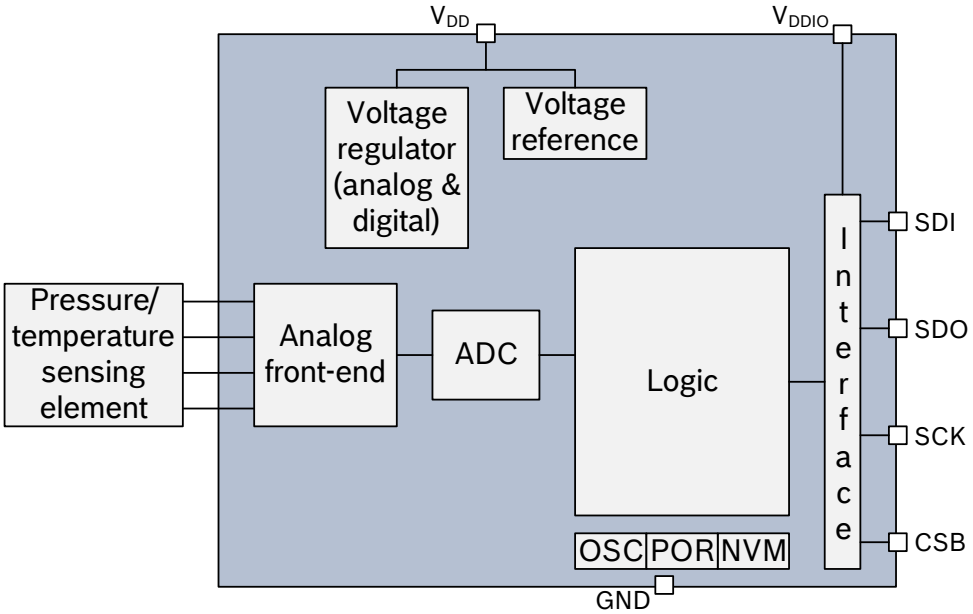

Figure 1: Block diagram of BMP280

3.2 Power management

The BMP280 has two separate power supply pins

- V_{DD} is the main power supply for all internal analog and digital functional blocks
- V_{DDIO} is a separate power supply pin, used for the supply of the digital interface

A power-on reset generator is built in which resets the logic circuitry and the register values after the power-on sequence. There are no limitations on slope and sequence of raising the V_{DD} and V_{DDIO} levels. After powering up, the sensor settles in sleep mode (see 3.6.1).

Warning. Holding any interface pin (SDI, SDO, SCK or CSB) at a logical high level when V_{DDIO} is switched off can permanently damage the device due caused by excessive current flow through the ESD protection diodes.

If V_{DDIO} is supplied, but V_{DD} is not, the interface pins are kept at a high-Z level. The bus can therefore already be used freely before the BMP280 V_{DD} supply is established.

3.3 Measurement flow

The BMP280 measurement period consists of a temperature and pressure measurement with selectable oversampling. After the measurement period, the data are passed through an optional IIR filter, which removes short-term fluctuations in pressure (e.g. caused by slamming a door). The flow is depicted in the diagram below.

© Bosch Sensortec GmbH reserves all rights even in the event of industrial property rights. We reserve all rights of disposal such as copying and passing on to third parties. BOSCH and the symbol are registered trademarks of Robert Bosch GmbH, Germany.
Note: Specifications within this document are subject to change without notice. Not intended for publication.

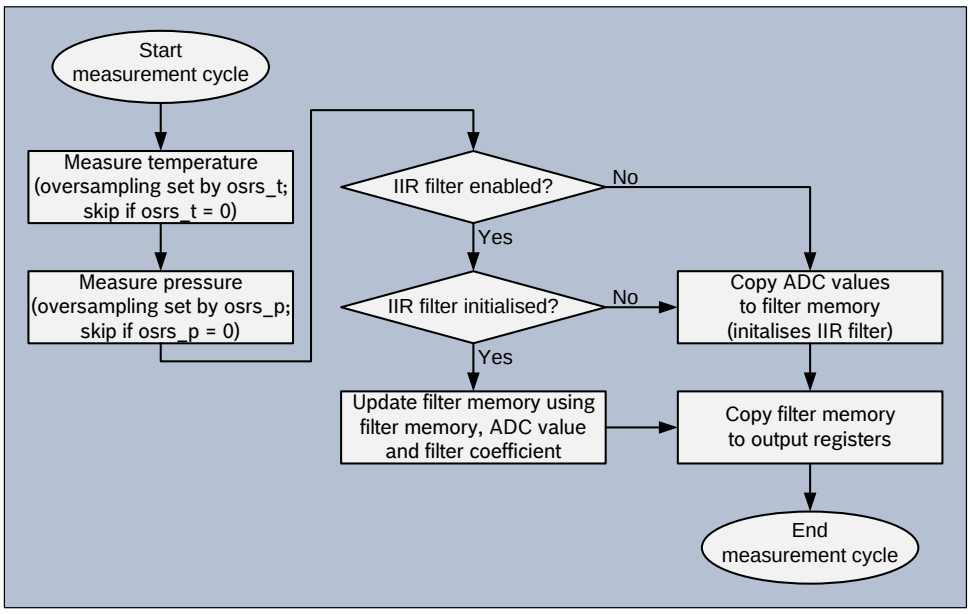

Figure 2: BMP280 measurement cycle

The individual blocks of the diagram above will be detailed in the following subchapters.

3.3.1 Pressure measurement

Pressure measurement can be enabled or skipped. Skipping the measurement could be useful if BMP280 is used as temperature sensor. When enabled, several oversampling options exist. Each oversampling step reduces noise and increases the output resolution by one bit, which is stored in the XLSB data register 0xF9. Enabling/disabling the measurement and oversampling settings are selected through the osrs_p[2:0] bits in control register 0xF4.

Table 4: *osrs_p* settings

Oversampling setting	Pressure oversampling	Typical pressure resolution	Recommended temperature oversampling
Pressure measurement skipped	Skipped (output set to 0x80000)	–	As needed
Ultra low power	×1	16 bit / 2.62 Pa	×1
Low power	×2	17 bit / 1.31 Pa	×1
Standard resolution	×4	18 bit / 0.66 Pa	×1
High resolution	×8	19 bit / 0.33 Pa	×1
Ultra high resolution	×16	20 bit / 0.16 Pa	×2

In order to find a suitable setting for *osrs_p*, please consult chapter 3.4.

© Bosch Sensortec GmbH reserves all rights even in the event of industrial property rights. We reserve all rights of disposal such as copying and passing on to third parties. BOSCH and the symbol are registered trademarks of Robert Bosch GmbH, Germany.
Note: Specifications within this document are subject to change without notice. Not intended for publication.

3.3.2 Temperature measurement

Temperature measurement can be enabled or skipped. Skipping the measurement could be useful to measure pressure extremely rapidly. When enabled, several oversampling options exist. Each oversampling step reduces noise and increases the output resolution by one bit, which is stored in the XLSB data register 0xFC. Enabling/disabling the temperature measurement and oversampling setting are selected through the osrs_t[2:0] bits in control register 0xF4.

Table 5: *osrs_t* settings

osrs_t[2:0]	Temperature oversampling	Typical temperature resolution
000	Skipped (output set to 0x80000)	–
001	×1	16 bit / 0.0050 °C
010	×2	17 bit / 0.0025 °C
011	×4	18 bit / 0.0012 °C
100	×8	19 bit / 0.0006 °C
101, 110, 111	×16	20 bit / 0.0003 °C

It is recommended to base the value of *osrs_t* on the selected value of *osrs_p* as per Table 4. Temperature oversampling above ×2 is possible, but will not significantly improve the accuracy of the pressure output any further. The reason for this is that the noise of the compensated pressure value depends more on the raw pressure than on the raw temperature noise. Following the recommended setting will result in an optimal noise-to-power ratio.

3.3.3 IIR filter

The environmental pressure is subject to many short-term changes, caused e.g. by slamming of a door or window, or wind blowing into the sensor. To suppress these disturbances in the output data without causing additional interface traffic and processor work load, the BMP280 features an internal IIR filter. It effectively reduces the bandwidth of the output signals[6]. The output of a next measurement step is filter using the following formula:

$$data_filtered = \frac{data_filtered_old \cdot (filter_coefficient - 1) + data_ADC}{filter_coefficient},$$

where data_filtered_old is the data coming from the previous acquisition, and data_ADC is the data coming from the ADC before IIR filtering.

The IIR filter can be configured using the filter[2:0] bits in control register 0xF5 with the following options:

[6] Since most pressure sensors do not sample continuously, filtering can suffer from signals with a frequency higher than the sampling rate of the sensor. E.g. environmental fluctuations caused by windows being opened and closed might have a frequency <5 Hz. Consequently, a sampling rate of ODR = 10 Hz is sufficient to obey the Nyquist theorem.

© Bosch Sensortec GmbH reserves all rights even in the event of industrial property rights. We reserve all rights of disposal such as copying and passing on to third parties. BOSCH and the symbol are registered trademarks of Robert Bosch GmbH, Germany.
Note: Specifications within this document are subject to change without notice. Not intended for publication.

Table 6: *filter* settings

Filter coefficient	Samples to reach ≥75 % of step response
Filter off	1
2	2
4	5
8	11
16	22

In order to find a suitable setting for *filter*, please consult chapter 3.4.

When writing to the register *filter*, the filter is reset. The next value will pass through the filter and be the initial memory value for the filter. If temperature or pressure measurement is skipped, the corresponding filter memory will be kept unchanged even though the output registers are set to 0x80000. When the previously skipped measurement is re-enabled, the output will be filtered using the filter memory from the last time when the measurement was not skipped.

3.4 Filter selection

In order to select optimal settings, the following use cases are suggested:

Table 7: Recommended filter settings based on use cases

Use case	Mode	Over-sampling setting	osrs_p	osrs_t	IIR filter coeff. (see 3.3.3)	I_{DD} [µA] (see 3.7)	ODR [Hz] (see 3.8.2)	RMS Noise [cm] (see 3.5)
handheld device low-power (e.g. Android)	Normal	Ultra high resolution	×16	×2	4	247	10.0	4.0
handheld device dynamic (e.g. Android)	Normal	Standard resolution	×4	×1	16	577	83.3	2.4
Weather monitoring (lowest power)	Forced	Ultra low power	×1	×1	Off	0.14	1/60	26.4
Elevator / floor change detection	Normal	Standard resolution	×4	×1	4	50.9	7.3	6.4
Drop detection	Normal	Low power	×2	×1	Off	509	125	20.8
Indoor navigation	Normal	Ultra high resolution	×16	×2	16	650	26.3	1.6

© Bosch Sensortec GmbH reserves all rights even in the event of industrial property rights. We reserve all rights of disposal such as copying and passing on to third parties. BOSCH and the symbol are registered trademarks of Robert Bosch GmbH, Germany.
Note: Specifications within this document are subject to change without notice. Not intended for publication.

3.5 Noise

Noise depends on the oversampling and filter settings selected. The stated values were determined in a controlled pressure environment and are based on the average standard deviation of 32 consecutive measurement points taken at highest sampling speed. This is needed in order to exclude long term drifts from the noise measurement.

Table 8: Noise in pressure

Typical RMS noise in pressure [Pa]					
Oversampling setting	**IIR filter coefficient**				
	off	**2**	**4**	**8**	**16**
Ultra low power	3.3	1.9	1.2	0.9	0.4
Low power	2.6	1.5	1.0	0.6	0.4
Standard resolution	2.1	1.2	0.8	0.5	0.3
High resolution	1.6	1.0	0.6	0.4	0.2
Ultra high resolution	1.3	0.8	0.5	0.4	0.2

Table 9: Noise in temperature

Typical RMS noise in temperature [°C]	
Temperature oversampling	**IIR filter off**
oversampling ×1	0.005
oversampling ×2	0.004
oversampling ×4	0.003
oversampling ×8	0.003
oversampling ×16	0.002

3.6 Power modes

The BMP280 offers three power modes: sleep mode, forced mode and normal mode. These can be selected using the mode[1:0] bits in control register 0xF4.

Table 10: *mode* settings

***mode*[1:0]**	**Mode**
00	Sleep mode
01 and 10	Forced mode
11	Normal mode

© Bosch Sensortec GmbH reserves all rights even in the event of industrial property rights. We reserve all rights of disposal such as copying and passing on to third parties. BOSCH and the symbol are registered trademarks of Robert Bosch GmbH, Germany.
Note: Specifications within this document are subject to change without notice. Not intended for publication.

3.6.1 Sleep mode

Sleep mode is set by default after power on reset. In sleep mode, no measurements are performed and power consumption (I_{DDSM}) is at a minimum. All registers are accessible; Chip-ID and compensation coefficients can be read.

3.6.2 Forced mode

In forced mode, a single measurement is performed according to selected measurement and filter options. When the measurement is finished, the sensor returns to sleep mode and the measurement results can be obtained from the data registers. For a next measurement, forced mode needs to be selected again. This is similar to BMP180 operation. Forced mode is recommended for applications which require low sampling rate or host-based synchronization.

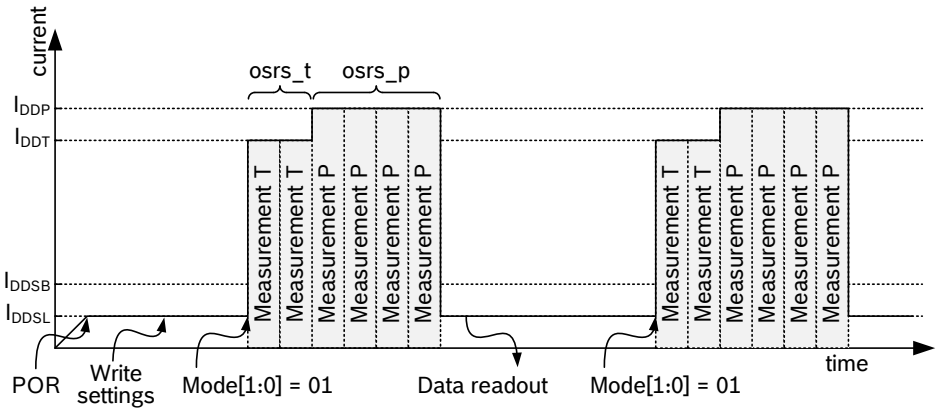

Figure 3: Forced mode timing diagram

3.6.3 Normal mode

Normal mode continuosly cycles between an (active) measurement period and an (inactive) standby period, whose time is defined by $t_{standby}$. The current in the standby period (I_{DDSB}) is slightly higher than in sleep mode. After setting the mode,measurement and filter options, the last measurement results can be obtained from the data registers without the need of further write accesses. Normal mode is recommended when using the IIR filter, and useful for applications in which short-term disturbances (e.g. blowing into the sensor) should be filtered.

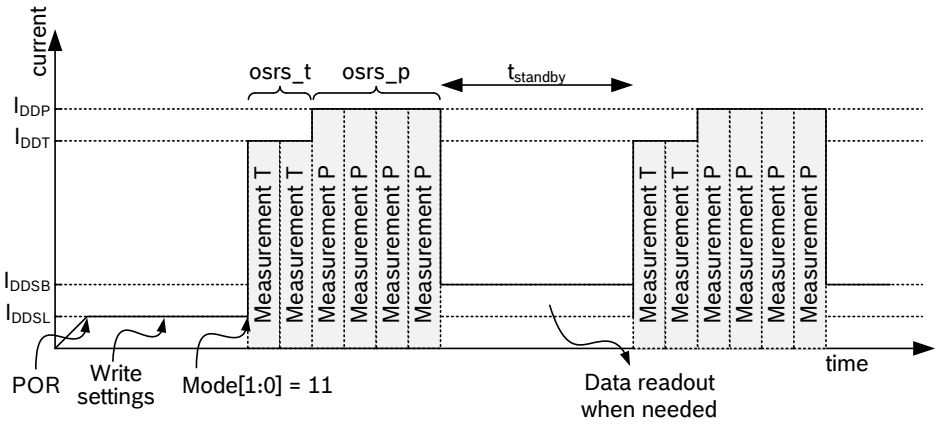

Figure 4: Normal mode timing diagram

© Bosch Sensortec GmbH reserves all rights even in the event of industrial property rights. We reserve all rights of disposal such as copying and passing on to third parties. BOSCH and the symbol are registered trademarks of Robert Bosch GmbH, Germany.
Note: Specifications within this document are subject to change without notice. Not intended for publication.

The standby time is determined by the contents of the t_sb[2:0] bits in control register 0xF5 according to the table below:

Table 11: *t_sb* settings

***t_sb*[1:0]**	**$t_{standby}$ [ms]**
000	0.5
001	62.5
010	125
011	250
100	500
101	1000
110	2000
111	4000

3.6.4 Mode transition diagram

The supported mode transitions are displayed below. If the device is currently performing a measurement, execution of mode switching commands is delayed until the end of the currently running measurement period. Further mode change commands are ignored until the last mode change command is executed. Mode transitions other than the ones shown below are tested for stability but do not represent recommended use of the device.

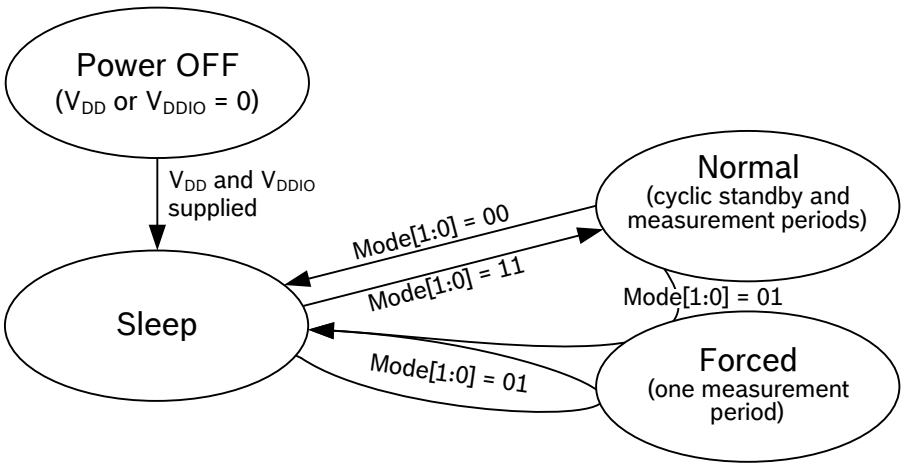

Figure 5: Mode transition diagram

© Bosch Sensortec GmbH reserves all rights even in the event of industrial property rights. We reserve all rights of disposal such as copying and passing on to third parties. BOSCH and the symbol are registered trademarks of Robert Bosch GmbH, Germany.
Note: Specifications within this document are subject to change without notice. Not intended for publication.

3.7 Current consumption

The current consumption depends on ODR and oversampling setting. The values given below are normalized to an ODR of 1 Hz. The actual consumption at a given ODR can be calculated by multiplying the consumption in Table 12 with the ODR used. The actual ODR is defined either by the frequency at which the user sets forced measurements or by oversampling and $t_{standby}$ settings in normal mode in Table 14.

Table 12: Current consumption

Oversampling setting	Pressure oversampling	Temperature oversampling	I_{DD} [µA] @ 1 Hz forced mode	
			Typ	Max
Ultra low power	×1	×1	2.74	4.16
Low power	×2	×1	4.17	6.27
Standard resolution	×4	×1	7.02	10.50
High resolution	×8	×1	12.7	18.95
Ultra high resolution	×16	×2	24.8	36.85

3.8 Measurement timings

The rate at which measurements can be performed in forced mode depends on the oversampling settings *osrs_t* and *osrs_p*. The rate at which they are performed in normal mode depends on the oversampling setting settings *osrs_t* and *osrs_p* and the standby time $t_{standby}$. In the following table the resulting ODRs are given only for the suggested osrs combinations.

3.8.1 Measurement time

The following table explains the typical and maximum measurement time based on selected oversampling setting. The minimum achievable frequency is determined by the maximum measurement time.

Table 13: measurement time

Oversampling setting	Pressure oversampling	Temperature oversampling	Measurement time [ms]		Measurement rate [Hz]	
			Typ	Max	Typ	Min
Ultra low power	×1	×1	5.5	6.4	181.8	155.6
Low power	×2	×1	7.5	8.7	133.3	114.6
Standard resolution	×4	×1	11.5	13.3	87.0	75.0
High resolution	×8	×1	19.5	22.5	51.3	44.4
Ultra high resolution	×16	×2	37.5	43.2	26.7	23.1

© Bosch Sensortec GmbH reserves all rights even in the event of industrial property rights. We reserve all rights of disposal such as copying and passing on to third parties. BOSCH and the symbol are registered trademarks of Robert Bosch GmbH, Germany.
Note: Specifications within this document are subject to change without notice. Not intended for publication.

3.8.2 Measurement rate in normal mode

The following table explains which measurement rates can be expected in normal mode based on oversampling setting and $t_{standby}$.

Table 14: typical output data Rate (ODR) in normal mode [Hz]

Oversampling setting	$t_{standby}$ [ms]							
	0.5	62.5	125	250	500	1000	2000	4000
Ultra low power	166.67	14.71	7.66	3.91	1.98	0.99	0.50	0.25
Low power	125.00	14.29	7.55	3.88	1.97	0.99	0.50	0.25
Standard resolution	83.33	13.51	7.33	3.82	1.96	0.99	0.50	0.25
High resolution	50.00	12.20	6.92	3.71	1.92	0.98	0.50	0.25
Ultra high resolution	26.32	10.00	6.15	3.48	1.86	0.96	0.49	0.25

Table 15: Sensor timing according to recommended settings (based on use cases)

Use case	Mode	Over-sampling setting	osrs_p	osrs_t	IIR filter coeff. (see 3.3.3)	Timing	ODR [Hz] (see 3.8.2)	BW [Hz] (see 3.3.3)
handheld device low-power (e.g. Android)	Normal	Ultra high resolution	×16	×2	4	$t_{standby}$ = 62.5 ms	10.0	0.92
handheld device dynamic (e.g. Android)	Normal	Standard resolution	×4	×1	16	$t_{standby}$ = 0.5 ms	83.3	1.75
Weather monitoring (lowest power)	Forced	Ultra low power	×1	×1	Off	1/min	1/60	full
Elevator / floor change detection	Normal	Standard resolution	×4	×1	4	$t_{standby}$ = 125 ms	7.3	0.67
Drop detection	Normal	Low power	×2	×1	Off	$t_{standby}$ = 0.5 ms	125	full
Indoor navigation	Normal	Ultra high resolution	×16	×2	16	$t_{standby}$ = 0.5 ms	26.3	0.55

3.9 Data readout

To read out data after a conversion, it is strongly recommended to use a burst read and not address every register individually. This will prevent a possible mix-up of bytes belonging to different measurements and reduce interface traffic. Data readout is done by starting a burst read from 0xF7 to 0xFC. The data are read out in an unsigned 20-bit format both for pressure and for temperature. It is strongly recommended to use the BMP280 API, available from Bosch Sensortec, for readout and compensation. For details on memory map and interfaces, please consult chapters 3.12 and 5 respectively.

© Bosch Sensortec GmbH reserves all rights even in the event of industrial property rights. We reserve all rights of disposal such as copying and passing on to third parties. BOSCH and the symbol are registered trademarks of Robert Bosch GmbH, Germany.
Note: Specifications within this document are subject to change without notice. Not intended for publication.

The timing for data readout in forced mode should be done so that the maximum measurement times (see chapter 3.8.1) are respected. In normal mode, readout can be done at a speed similar to the expected data output rate (see chapter 3.8.2). After the values of 'ut' and 'up' have been read, the actual pressure and temperature need to be calculated using the compensation parameters stored in the device. The procedure is elaborated in chapter 3.11.

3.10 Data register shadowing

In normal mode, measurement timing is not necessarily synchronized to readout. This means that new measurement results may become available while the user is reading the results from the previous measurement. In this case, shadowing is performed in order to guarantee data consistency. Shadowing will only work if all data registers are read in a single burst read. Therefore, the user must use burst reads if he does not synchronize data readout with the measurement cycle. Using several independent read commands may result in inconsistent data.

If a new measurement is finished and the data registers are still being read, the new measurement results are transferred into shadow data registers. The content of shadow registers is transferred into data registers as soon as the user ends the burst read, even if not all data registers were read. Reading across several data registers can therefore only be guaranteed to be consistent within one measurement cycle if a single burst read command is used. The end of the burst read is marked by the rising edge of CSB pin in SPI case or by the recognition of a stop condition in I2C case. After the end of the burst read, all user data registers are updated at once.

3.11 Output compensation

The BMP280 output consists of the ADC output values. However, each sensing element behaves differently, and actual pressure and temperature must be calculated using a set of calibration parameters. The recommended calculation in chapter 3.11.3 uses fixed point arithmetic. In high-level languages like Matlab™ or LabVIEW™, fixed-point code may not be well supported. In this case the floating-point code in appendix 8.1 can be used as an alternative. For 8-bit micro controllers, the variable size may be limited. In this case a simplified 32 bit integer code with reduced accuracy is given in appendix 8.2.

3.11.1 Computational requirements

The table below shows the number of clock cycles needed for compensation calculations on a 32 bit Cortex-M3 micro controller with GCC optimization level –O2. This controller does not contain a floating point unit, so all floating-point calculations are emulated. Floating point is only recommended for PC applications where an FPU is present.

Table 16: Computational requirements for compensation formulas

Compensation of	Number of clock cycles (ARM Cortex-M3)		
	32 bit integer	64 bit integer	Double precision
Temperature	~46	–	~2400 [7]
Pressure	~112 [8]	~1400	~5400 7

[7] Use only recommended for high-level programming languages like Matlab™ or LabVIEW™
[8] Use only recommended for 8-bit micro controllers

© Bosch Sensortec GmbH reserves all rights even in the event of industrial property rights. We reserve all rights of disposal such as copying and passing on to third parties. BOSCH and the symbol are registered trademarks of Robert Bosch GmbH, Germany.
Note: Specifications within this document are subject to change without notice. Not intended for publication.

3.11.2 Trimming parameter readout

The trimming parameters are programmed into the devices' non-volatile memory (NVM) during production and cannot be altered by the customer. Each compensation word is a 16-bit signed or unsigned integer value stored in two's complement. As the memory is organized into 8-bit words, two words must always be combined in order to represent the compensation word. The 8-bit registers are named calib00…calib25 and are stored at memory addresses 0x88…0xA1. The corresponding compensation words are named dig_T# for temperature compensation related values and dig_P# for pressure compensation related values. The mapping is shown in Table 17.

Table 17: Compensation parameter storage, naming and data type

Register Address LSB / MSB	Register content	Data type
0x88 / 0x89	dig_T1	unsigned short
0x8A / 0x8B	dig_T2	signed short
0x8C / 0x8D	dig_T3	signed short
0x8E / 0x8F	dig_P1	unsigned short
0x90 / 0x91	dig_P2	signed short
0x92 / 0x93	dig_P3	signed short
0x94 / 0x95	dig_P4	signed short
0x96 / 0x97	dig_P5	signed short
0x98 / 0x99	dig_P6	signed short
0x9A / 0x9B	dig_P7	signed short
0x9C / 0x9D	dig_P8	signed short
0x9E / 0x9F	dig_P9	signed short
0xA0 / 0xA1	reserved	reserved

3.11.3 Compensation formula

Please note that it is strongly advised to use the API available from Bosch Sensortec to perform readout and compensation. If this is not wanted, the code below can be applied at the user's risk. Both pressure and temperature values are expected to be received in 20 bit format, positive, stored in a 32 bit signed integer.

The variable t_fine (signed 32 bit) carries a fine resolution temperature value over to the pressure compensation formula and could be implemented as a global variable.
The data type "BMP280_S32_t" should define a 32 bit signed integer variable type and can usually be defined as "long signed int".

The data type "BMP280_U32_t" should define a 32 bit unsigned integer variable type and can usually be defined as "long unsigned int".

© Bosch Sensortec GmbH reserves all rights even in the event of industrial property rights. We reserve all rights of disposal such as copying and passing on to third parties. BOSCH and the symbol are registered trademarks of Robert Bosch GmbH, Germany.
Note: Specifications within this document are subject to change without notice. Not intended for publication.

For best possible calculation accuracy, 64 bit integer support is needed. If this is not possible on your platform, please see appendix 8.2 for a 32 bit alternative.

The data type “BMP280_S64_t” should define a 64 bit signed integer variable type, which on most supporting platforms can be defined as “long long signed int”. The revision of the code is rev.1.1.

```
// Returns temperature in DegC, resolution is 0.01 DegC. Output value of “5123” equals 51.23 DegC.
// t_fine carries fine temperature as global value
BMP280_S32_t t_fine;
BMP280_S32_t bmp280_compensate_T_int32(BMP280_S32_t adc_T)
{
    BMP280_S32_t var1, var2, T;
    var1  = ((((adc_T>>3) - ((BMP280_S32_t)dig_T1<<1))) * ((BMP280_S32_t)dig_T2)) >> 11;
    var2  = (((((adc_T>>4) - ((BMP280_S32_t)dig_T1)) * ((adc_T>>4) - ((BMP280_S32_t)dig_T1))) >> 12) *
        ((BMP280_S32_t)dig_T3)) >> 14;
    t_fine = var1 + var2;
    T  = (t_fine * 5 + 128) >> 8;
    return T;
}
“”_
// Returns pressure in Pa as unsigned 32 bit integer in Q24.8 format (24 integer bits and 8 fractional bits).
// Output value of “24674867” represents 24674867/256 = 96386.2 Pa = 963.862 hPa
BMP280_U32_t bmp280_compensate_P_int64(BMP280_S32_t adc_P)
{
    BMP280_S64_t var1, var2, p;
    var1 = ((BMP280_S64_t)t_fine) - 128000;
    var2 = var1 * var1 * (BMP280_S64_t)dig_P6;
    var2 = var2 + ((var1*(BMP280_S64_t)dig_P5)<<17);
    var2 = var2 + (((BMP280_S64_t)dig_P4)<<35);
    var1 = ((var1 * var1 * (BMP280_S64_t)dig_P3)>>8) + ((var1 * (BMP280_S64_t)dig_P2)<<12);
    var1 = (((((BMP280_S64_t)1)<<47)+var1))*((BMP280_S64_t)dig_P1)>>33;
    if (var1 == 0)
    {
        return 0; // avoid exception caused by division by zero
    }
    p = 1048576-adc_P;
    p = (((p<<31)-var2)*3125)/var1;
    var1 = (((BMP280_S64_t)dig_P9) * (p>>13) * (p>>13)) >> 25;
    var2 = (((BMP280_S64_t)dig_P8) * p) >> 19;
    p = ((p + var1 + var2) >> 8) + (((BMP280_S64_t)dig_P7)<<4);
    return (BMP280_U32_t)p;
```

3.12 Calculating pressure and temperature

The following figure shows the detailed algorithm for pressure and temperature measurement.

This algorithm is available to customers as reference C source code (“BMP28x_ API”) from Bosch Sensortec and via its sales and distribution partners.

Please contact your Bosch Sensortec representative for details.

© Bosch Sensortec GmbH reserves all rights even in the event of industrial property rights. We reserve all rights of disposal such as copying and passing on to third parties. BOSCH and the symbol are registered trademarks of Robert Bosch GmbH, Germany.
Note: Specifications within this document are subject to change without notice. Not intended for publication.

Calculation of pressure and temperature for BMP280

Sample trimming values			
Register Address (LSB / MSB)	Name	Value	Type
0x88 / 0x89	dig_T1	27504	unsigned short
0x8A / 0x8B	dig_T2	26435	short
0x8C / 0x8D	dig_T3	-1000	short
0x8E / 0x8F	dig_P1	36477	unsigned short
0x90 / 0x91	dig_P2	-10685	short
0x92 / 0x93	dig_P3	3024	short
0x94 / 0x95	dig_P4	2855	short
0x96 / 0x97	dig_P5	140	short
0x98 / 0x99	dig_P6	-7	short
0x9A / 0x9B	dig_P7	15500	short
0x9C / 0x9D	dig_P8	-14600	short
0x9E / 0x9F	dig_P9	6000	short
0xA0 / 0xA1			

Sample measurement values				
Register Address (MSB / LSB / XLSB)	Name	Value	Type	
0xF7 / 0xF8 / 0xF9[7:4]	UT [20 bit]	519888	signed long (*)	(*) Value is always positive, even though the compensation functions expect a signed integer as input
0xFA / 0xFB / 0xFC[7:4]	UP [20 bit]	415148	signed long (*)	(*) Value is always positive, even though the compensation functions expect a signed integer as input

var1 =	128793,1787		var1 = (((double)adc_T)/16384.0 - ((double)dig_T1)/1024.0) * ((double)dig_T2);
var2 =	-370,8917052		var2 = ((((double)adc_T)/131072.0 - ((double)dig_T1)/8192.0) * (((double)adc_T)/131072.0 - ((double) dig_T1)/8192.0)) * ((double)dig_T3);
tfine =	128422		t_fine = (BMP280_S32_t)(var1 + var2);
T =	**25,08**	***Temperature [°C]***	T = (var1 + var2) / 5120.0;
integer result (**):	**2508**	***Temperature [1/100 °C]***	
var1 =	211,1435029		var1 = ((double)t_fine/2.0) - 64000.0;
var2 =	-9,523652701		var2 = var1 * var1 * ((double)dig_P6) / 32768.0;
var2 =	59110,65716		var2 = var2 + var1 * ((double)dig_P5) * 2.0;
var2 =	187120057,7		var2 = (var2/4.0)+(((double)dig_P4) * 65536.0);
var1 =	-4,302618389		var1 = (((double)dig_P3) * var1 * var1 / 524288.0 + ((double)dig_P2) * var1) / 524288.0;
var1 =	36472,21037		var1 = (1.0 + var1 / 32768.0)*((double)dig_P1);
p =	633428		p = 1048576.0 - (double)adc_P;
p =	100717,8456		p = (p - (var2 / 4096.0)) * 6250.0 / var1;
var1 =	28342,24444		var1 = ((double)dig_P9) * p * p / 2147483648.0;
var2 =	-44875,50492		var2 = p * ((double)dig_P8) / 32768.0;
p =	**100653,27**	***Pressure [Pa]***	p = p + (var1 + var2 + ((double)dig_P7)) / 16.0;
int32 result (**):	**100653**	***Pressure [Pa]***	
int64 result (**):	**25767236**	***Pressure [1/256 Pa]***	

(**) The actual result of the integer calculation may deviate slightly from the values shown here due to integer calculation rounding errors

© Bosch Sensortec GmbH reserves all rights even in the event of industrial property rights. We reserve all rights of disposal such as copying and passing on to third parties. BOSCH and the symbol are registered trademarks of Robert Bosch GmbH, Germany.
Note: Specifications within this document are subject to change without notice. Not intended for publication.

4. Global memory map and register description

4.1 General remarks

All communication with the device is performed by reading from and writing to registers. Registers have a width of 8 bits. There are several registers which are reserved; they should not be written to and no specific value is guaranteed when they are read. For details on the interface, consult chapter 5.

4.2 Memory map

The memory map is given in Table 18 below. Reserved registers are not shown.

Table 18: Memory map

Register Name	Address	bit7	bit6	bit5	bit4	bit3	bit2	bit1	bit0	Reset state
temp_xlsb	0xFC	temp_xlsb<7:4>				0	0	0	0	0x00
temp_lsb	0xFB	temp_lsb<7:0>								0x00
temp_msb	0xFA	temp_msb<7:0>								0x80
press_xlsb	0xF9	press_xlsb<7:4>				0	0	0	0	0x00
press_lsb	0xF8	press_lsb<7:0>								0x00
press_msb	0xF7	press_msb<7:0>								0x80
config	0xF5	t_sb[2:0]			filter[2:0]				spi3w_en[0]	0x00
ctrl_meas	0xF4	osrs_t[2:0]			osrs_p[2:0]			mode[1:0]		0x00
status	0xF3					measuring[0]			im_update[0]	0x00
reset	0xE0	reset[7:0]								0x00
id	0xD0	chip_id[7:0]								0x58
calib25...calib00	0xA1…0x88	calibration data								individual

Registers:	**Reserved registers**	Calibration data	**Control registers**	**Data registers**	**Status registers**	**Revision**	**Reset**
Type:	**do not write**	read only	**read / write**	**read only**	**read only**	**read only**	**write only**

4.3 Register description

4.3.1 Register 0xD0 *"id"*

The *"id"* register contains the chip identification number chip_id[7:0], which is 0x58. This number can be read as soon as the device finished the power-on-reset.

4.3.2 Register 0xE0 *"reset"*

The *"reset"* register contains the soft reset word reset[7:0]. If the value 0xB6 is written to the register, the device is reset using the complete power-on-reset procedure. Writing other values than 0xB6 has no effect. The readout value is always 0x00.

© Bosch Sensortec GmbH reserves all rights even in the event of industrial property rights. We reserve all rights of disposal such as copying and passing on to third parties. BOSCH and the symbol are registered trademarks of Robert Bosch GmbH, Germany.
Note: Specifications within this document are subject to change without notice. Not intended for publication.

4.3.3 Register 0xF3 *"status"*

The *"status"* register contains two bits which indicate the status of the device.

Table 19: Register 0xF3 *"status"*

Register 0xF3 *"status"*	Name	Description
Bit 3	measuring[0]	Automatically set to '1' whenever a conversion is running and back to '0' when the results have been transferred to the data registers.
Bit 0	im_update[0]	Automatically set to '1' when the NVM data are being copied to image registers and back to '0' when the copying is done. The data are copied at power-on-reset and before every conversion.

4.3.4 Register 0xF4 *"ctrl_meas"*

The *"ctrl_meas"* register sets the data acquisition options of the device.

Table 20: Register 0xF4 *"ctrl_meas"*

Register 0xF4 *"ctrl_meas"*	Name	Description
Bit 7, 6, 5	osrs_t[2:0]	Controls oversampling of temperature data. See chapter 3.3.2 for details.
Bit 4, 3, 2	osrs_p[2:0]	Controls oversampling of pressure data. See chapter 3.3.1 for details.
Bit 1, 0	mode[1:0]	Controls the power mode of the device. See chapter 3.6 for details.

Table 21: register settings *osrs_p*

osrs_p[2:0]	Pressure oversampling
000	Skipped (output set to 0x80000)
001	oversampling ×1
010	oversampling ×2
011	oversampling ×4
100	oversampling ×8
101, Others	oversampling ×16

© Bosch Sensortec GmbH reserves all rights even in the event of industrial property rights. We reserve all rights of disposal such as copying and passing on to third parties. BOSCH and the symbol are registered trademarks of Robert Bosch GmbH, Germany.
Note: Specifications within this document are subject to change without notice. Not intended for publication.

Table 22: register settings *osrs_t*

osrs_t[2:0]	Temperature oversampling
000	Skipped (output set to 0x80000)
001	oversampling ×1
010	oversampling ×2
011	oversampling ×4
100	oversampling ×8
101, 110, 111	oversampling ×16

4.3.5 Register 0xF5 *"config"*

The *"config"* register sets the rate, filter and interface options of the device. Writes to the "config" register in normal mode may be ignored. In sleep mode writes are not ignored.

Table 23: Register 0xF5 *"config"*

Register 0xF5 *"config"*	Name	Description
Bit 7, 6, 5	t_sb[2:0]	Controls inactive duration $t_{standby}$ in normal mode. See chapter 3.6.3 for details.
Bit 4, 3, 2	filter[2:0]	Controls the time constant of the IIR filter. See chapter 3.3.3 for details.
Bit 0	spi3w_en[0]	Enables 3-wire SPI interface when set to '1'. See chapter 5.3 for details.

4.3.6 Register 0xF7…0xF9 *"press" (_msb, _lsb, _xlsb)*

The *"press"* register contains the raw pressure measurement output data up[19:0]. For details on how to read out the pressure and temperature information from the device, please consult chapter3.9.

Table 24: Register 0xF7 … 0xF9 *"press"*

Register 0xF7-0xF9 *"press"*	Name	Description
0xF7	press_msb[7:0]	Contains the MSB part up[19:12] of the raw pressure measurement output data.
0xF8	press_lsb[7:0]	Contains the LSB part up[11:4] of the raw pressure measurement output data.
0xF9 (bit 7, 6, 5, 4)	press_xlsb[3:0]	Contains the XLSB part up[3:0] of the raw pressure measurement output data. Contents depend on temperature resolution, see table 5.

© Bosch Sensortec GmbH reserves all rights even in the event of industrial property rights. We reserve all rights of disposal such as copying and passing on to third parties. BOSCH and the symbol are registered trademarks of Robert Bosch GmbH, Germany.
Note: Specifications within this document are subject to change without notice. Not intended for publication.

4.3.7 Register 0xFA...0xFC *"temp" (_msb, _lsb, _xlsb)*

The *"temp"* register contains the raw temperature measurement output data ut[19:0]. For details on how to read out the pressure and temperature information from the device, please consult chapter 3.9.

Table 25: Register 0xFA ... 0xFC *"temp"*

Register 0xF7-0xF9 *"press"*	Name	Description
0xFA	temp_msb[7:0]	Contains the MSB part ut[19:12] of the raw temperature measurement output data.
0xFB	temp_lsb[7:0]	Contains the LSB part ut[11:4] of the raw temperature measurement output data.
0xFC (bit 7, 6, 5, 4)	temp_xlsb[3:0]	Contains the XLSB part ut[3:0] of the raw temperature measurement output data. Contents depend on pressure resolution, see Table 4.

© Bosch Sensortec GmbH reserves all rights even in the event of industrial property rights. We reserve all rights of disposal such as copying and passing on to third parties. BOSCH and the symbol are registered trademarks of Robert Bosch GmbH, Germany.
Note: Specifications within this document are subject to change without notice. Not intended for publication.

5. Digital interfaces

The BMP280 supports the I²C and SPI digital interfaces; it acts as a slave for both protocols. The I²C interface supports the Standard, Fast and High Speed modes. The SPI interface supports both SPI mode '00' (CPOL = CPHA = '0') and mode '11' (CPOL = CPHA = '1') in 4-wire and 3-wire configuration.

The following transactions are supported:

- Single byte write
- multiple byte write (using pairs of register addresses and register data)
- single byte read
- multiple byte read (using a single register address which is auto-incremented)

5.1 Interface selection

Interface selection is done automatically based on CSB (chip select) status. If CSB is connected to V_{DDIO}, the I²C interface is active. If CSB is pulled down, the SPI interface is activated. After CSB has been pulled down once (regardless of whether any clock cycle occurred), the I²C interface is disabled until the next power-on-reset. This is done in order to avoid inadvertently decoding SPI traffic to another slave as I²C data. Since power-on-reset is only executed when both V_{DD} and V_{DDIO} are established, there is no risk of incorrect protocol detection due to power-up sequence used. However, if I²C is to be used and CSB is not directly connected to V_{DDIO} but rather through a programmable pin, it must be ensured that this pin already outputs the V_{DDIO} level during power-on-reset of the device. If this is not the case, the device will be locked in SPI mode and not respond to I²C commands.

5.2 I²C Interface

The I²C slave interface is compatible with Philips I²C Specification version 2.1. For detailed timings refer to Table 27. All modes (standard, fast, high speed) are supported. SDA and SCL are not pure open-drain. Both pads contain ESD protection diodes to VDDIO and GND. As the devices does not perform clock stretching, the SCL structure is a high-Z input without drain capability.

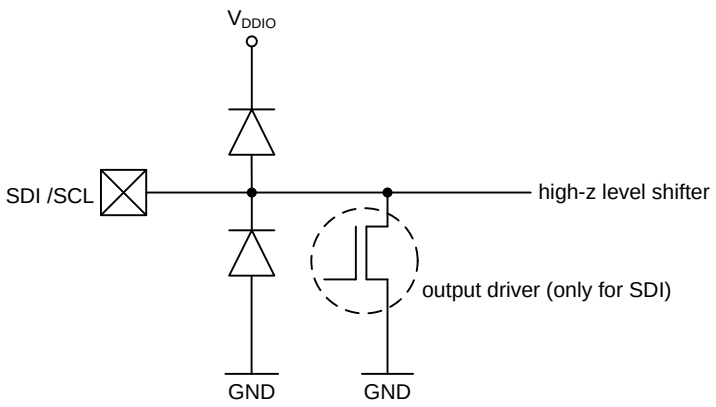

Figure 6: SDI/SCK ESD drawing

The 7-bit device address is 111011x. The 6 MSB bits are fixed. The last bit is changeable by SDO value and can be changed during operation. Connecting SDO to GND results in slave address 1110110 (0x76); connection it to V_{DDIO} results in slave address 1110111 (0x77), which

© Bosch Sensortec GmbH reserves all rights even in the event of industrial property rights. We reserve all rights of disposal such as copying and passing on to third parties. BOSCH and the symbol are registered trademarks of Robert Bosch GmbH, Germany.
Note: Specifications within this document are subject to change without notice. Not intended for publication.

is the same as BMP180's I²C address. The SDO pin cannot be left floating; if left floating, the I²C address will be undefined.

The I²C interface uses the following pins:

- SCK: serial clock (SCL)
- SDI: data (SDA)
- SDO: Slave address LSB (GND = '0', V_{DDIO} = '1')

CSB must be connected to V_{DDIO} to select I²C interface. SDI is bi-directional with open drain to GND: it must be externally connected to V_{DDIO} via a pull up resistor. Refer to chapter 6 for connection instructions.

The following abbreviations will be used in the I²C protocol figures:

- S Start
- P Stop
- ACKS Acknowledge by slave
- ACKM Acknowledge by master
- NACKM Not acknowledge by master

5.2.1 I²C write

Writing is done by sending the slave address in write mode (RW = '0'), resulting in slave address 111011X0 ('X' is determined by state of SDO pin. Then the master sends pairs of register addresses and register data. The transaction is ended by a stop condition. This is depicted in Figure 7.

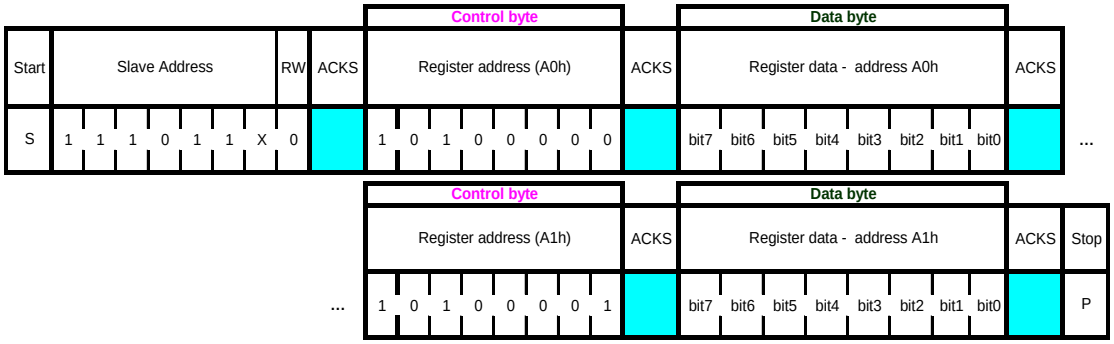

Figure 7: I²C multiple byte write (not auto-incremented)

5.2.2 I²C read

To be able to read registers, first the register address must be sent in write mode (slave address 111011X0). Then either a stop or a repeated start condition must be generated. After this the slave is addressed in read mode (RW = '1') at address 111011X1, after which the slave sends out data from auto-incremented register addresses until a NOACKM and stop condition occurs. This is depicted in Figure 8, where two bytes are read from register 0xF6 and 0xF7.

© Bosch Sensortec GmbH reserves all rights even in the event of industrial property rights. We reserve all rights of disposal such as copying and passing on to third parties. BOSCH and the symbol are registered trademarks of Robert Bosch GmbH, Germany.
Note: Specifications within this document are subject to change without notice. Not intended for publication.

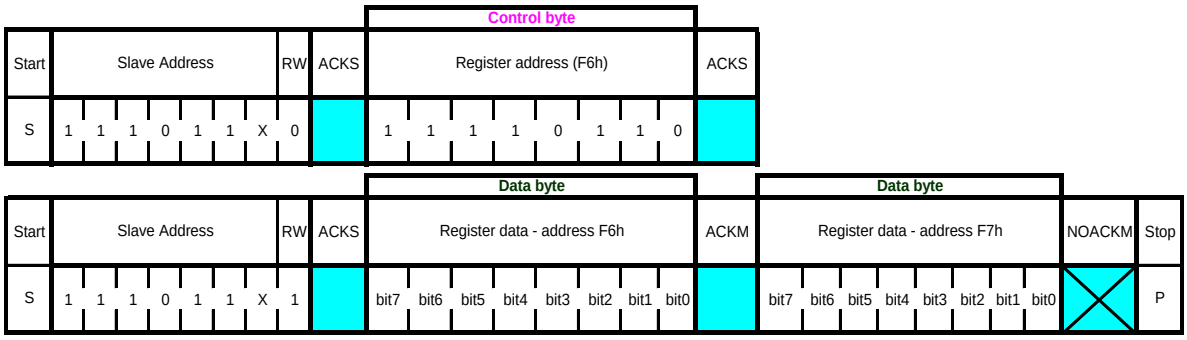

Figure 8: I²C multiple byte read

5.3 SPI interface

The SPI interface is compatible with SPI mode ‘00’ (CPOL = CPHA = ‘0’) and mode ‘11’ (CPOL = CPHA = ‘1’). The automatic selection between mode ‘00’ and ‘11’ is determined by the value of SCK after the CSB falling edge.

The SPI interface has two modes: 4-wire and 3-wire. The protocol is the same for both. The 3-wire mode is selected by setting ‘1’ to the register spi3w_en. The pad SDI is used as a data pad in 3-wire mode.

© Bosch Sensortec GmbH reserves all rights even in the event of industrial property rights. We reserve all rights of disposal such as copying and passing on to third parties. BOSCH and the symbol are registered trademarks of Robert Bosch GmbH, Germany.
Note: Specifications within this document are subject to change without notice. Not intended for publication.

The SPI interface uses the following pins:

- CSB: chip select, active low
- SCK: serial clock
- SDI: serial data input; data input/output in 3-wire mode
- SDO: serial data output; hi-Z in 3-wire mode

Refer to chapter 6 for connection instructions.

CSB is active low and has an integrated pull-up resistor. Data on SDI is latched by the device at SCK rising edge and SDO is changed at SCK falling edge. Communication starts when CSB goes to low and stops when CSB goes to high; during these transitions on CSB, SCK must be stable. The SPI protocol is shown in Figure 9. For timing details, please review Table 28.

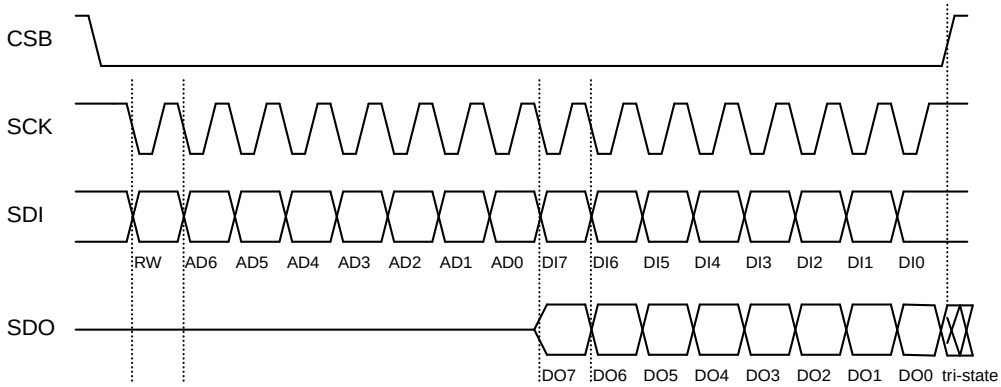

Figure 9: SPI protocol (shown for mode '11' in 4-wire configuration)

In SPI mode, only 7 bits of the register addresses are used; the MSB of register address is not used and replaced by a read/write bit (RW = '0' for write and RW = '1' for read).
Example: address 0xF7 is accessed by using SPI register address 0x77. For write access, the byte 0x77 is transferred, for read access, the byte 0xF7 is transferred.

5.3.1 SPI write

Writing is done by lowering CSB and sending pairs control bytes and register data. The control bytes consist of the SPI register address (= full register address without bit 7) and the write command (bit7 = RW = '0'). Several pairs can be written without raising CSB. The transaction is ended by a raising CSB. The SPI write protocol is depicted in Figure 10.

	Control byte								Data byte								Control byte								Data byte								
Start	RW	Register address (F4h)							Data register - address F4h								RW	Register address (F5h)							Data register - adress F5h								Stop
CSB = 0	0	1	1	1	0	1	0	0	bit7	bit6	bit5	bit4	bit3	bit2	bit1	bit0	0	1	1	1	0	1	0	1	bit7	bit6	bit5	bit4	bit3	bit2	bit1	bit0	CSB = 1

Figure 10: SPI multiple byte write (not auto-incremented)

5.3.2 SPI read

Reading is done by lowering CSB and first sending one control byte. The control bytes consist of the SPI register address (= full register address without bit 7) and the read command (bit 7 = RW = '1'). After writing the control byte, data is sent out of the SDO pin (SDI in 3-wire mode); the register address is automatically incremented. The SPI read protocol is shown in Figure 11.

© Bosch Sensortec GmbH reserves all rights even in the event of industrial property rights. We reserve all rights of disposal such as copying and passing on to third parties. BOSCH and the symbol are registered trademarks of Robert Bosch GmbH, Germany.
Note: Specifications within this document are subject to change without notice. Not intended for publication.

	Control byte								Data byte								Data byte								
Start	RW	Register address (F6h)							Data register - address F6h								Data register - address F7h								Stop
CSB = 0	1	1	1	1	0	1	1	0	bit15	bit14	bit13	bit12	bit11	bit10	bit9	bit8	bit7	bit6	bit5	bit4	bit3	bit2	bit1	bit0	CSB = 1

Figure 11: SPI multiple byte read

5.4 Interface parameter specification

5.4.1 General interface parameters

The general interface parameters are given in Table 26 below.

Table 26: interface parameters

Parameter	Symbol	Condition	Min	Typ	Max	Units
Input – low level	Vil_si	V_{DDIO}=1.2V to 3.6V			0.2 * V_{DDIO}	V
Input – high level	Vih_si	V_{DDIO}=1.2V to 3.6V	0.8 * V_{DDIO}			V
Output – low level for I2C	Vol_SDI	V_{DDIO}=1.62V, iol=3 mA			0.2 * V_{DDIO}	V
Output – low level for I2C	Vol_SDI_1.2	V_{DDIO}=1.20V, iol=3 mA			0.23 * V_{DDIO}	V
Output – low level	Vol_SDO	V_{DDIO}=1.62V, iol=1 mA			0.2 * V_{DDIO}	V
Output – low level	Vol_SDO_1.2	V_{DDIO}=1.20V, iol=1 mA			0.23 * V_{DDIO}	V
Output – high level	Voh	V_{DDIO}=1.62V, ioh=1 mA (SDO, SDI)	0.8 * V_{DDIO}			V
Output – high level	Voh_1.2	V_{DDIO}=1.2V, ioh=1 mA (SDO, SDI)	0.6 * V_{DDIO}			V
Pull-up resistor	Rpull	Internal pull-up resistance to V_{DDIO}	70	120	190	kΩ
I^2C bus load capacitor	Cb	On SDI and SCK			400	pF

5.4.2 I²C timings

For I²C timings, the following abbreviations are used:

- “S&F mode” = standard and fast mode
- “HS mode” = high speed mode
- Cb = bus capacitance on SDA line

All other naming refers to I²C specification 2.1 (January 2000).

The I²C timing diagram is shown in
Figure 12. The corresponding values are given in Table 27.

© Bosch Sensortec GmbH reserves all rights even in the event of industrial property rights. We reserve all rights of disposal such as copying and passing on to third parties. BOSCH and the symbol are registered trademarks of Robert Bosch GmbH, Germany.
Note: Specifications within this document are subject to change without notice. Not intended for publication.

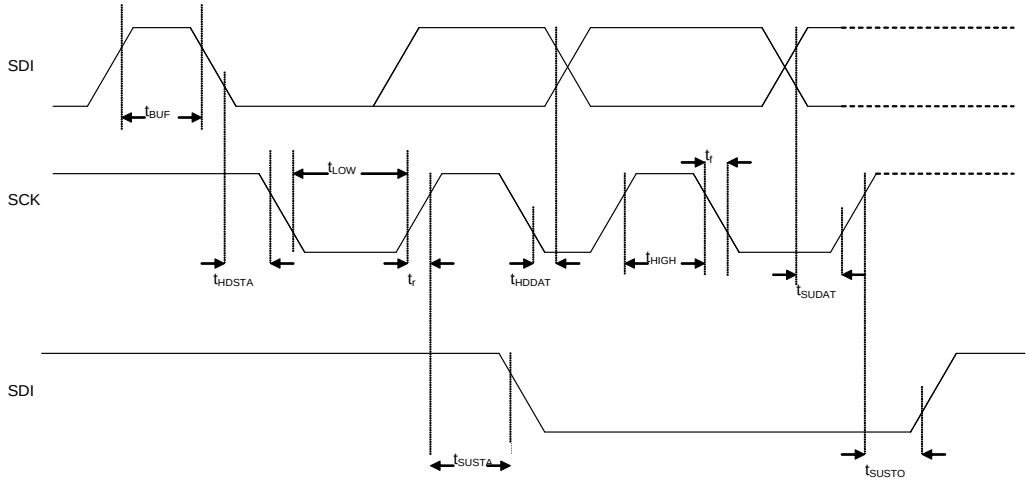

Figure 12: I²C timing diagram

Table 27: I²C timings

Parameter	Symbol	Condition	Min	Typ	Max	Units
SDI setup time	$t_{SU;DAT}$	S&F Mode HS mode	160 30			ns ns
SDI hold time	$t_{HD;DAT}$	S&F Mode, Cb≤100 pF S&F Mode, Cb≤400 pF HS mode, Cb≤100 pF HS mode, Cb≤400 pF	80 90 18 24		 115 150	ns ns ns ns
SCK low pulse	t_{LOW}	HS mode, Cb≤100 pF V_{DDIO} = 1.62 V	160			ns
SCK low pulse	t_{LOW}	HS mode, Cb≤100 pF V_{DDIO} = 1.2 V	210			ns

The above-mentioned I2C specific timings correspond to the following internal added delays:

- Input delay between SDI and SCK inputs: SDI is more delayed than SCK by typically 100 ns in Standard and Fast Modes and by typically 20 ns in High Speed Mode.
- Output delay from SCK falling edge to SDI output propagation is typically 140 ns in Standard and Fast Modes and typically 70 ns in High Speed Mode.

5.4.3 SPI timings

The SPI timing diagram is in Figure 13, while the corresponding values are given in Table 28. All timings apply both to 4- and 3-wire SPI.

© Bosch Sensortec GmbH reserves all rights even in the event of industrial property rights. We reserve all rights of disposal such as copying and passing on to third parties. BOSCH and the symbol are registered trademarks of Robert Bosch GmbH, Germany.
Note: Specifications within this document are subject to change without notice. Not intended for publication.

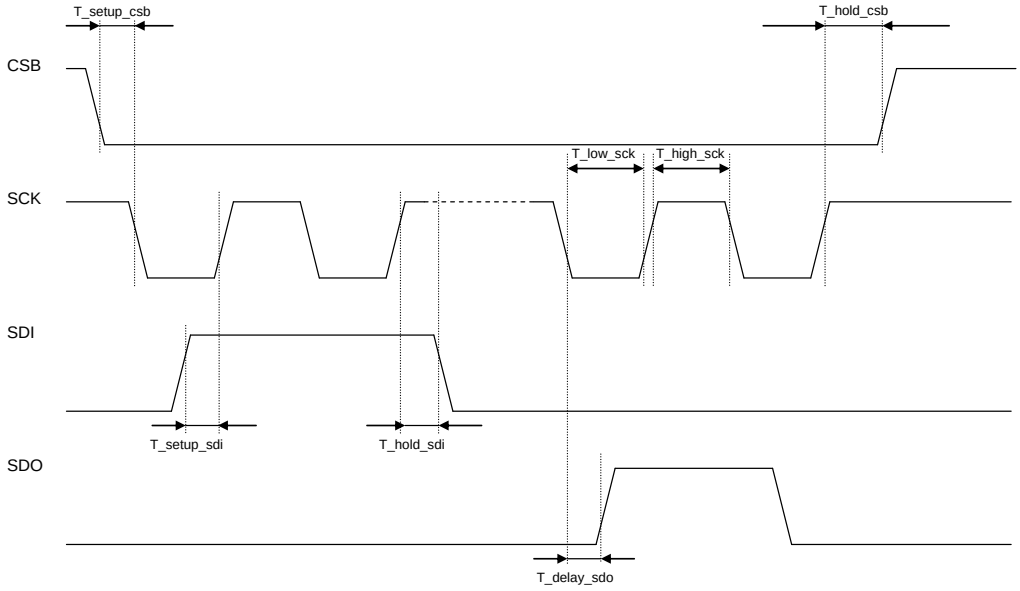

Figure 13: SPI timing diagram

Table 28: SPI timings

Parameter	Symbol	Condition	Min	Typ	Max	Units
SPI clock input frequency	F_spi		0		10	MHz
SCK low pulse	T_low_sck		20			ns
SCK high pulse	T_high_sck		20			ns
SDI setup time	T_setup_sdi		20			ns
SDI hold time	T_hold_sdi		20			ns
SDO output delay	T_delay_sdo	25pF load, V_{DDIO}=1.6V min			30	ns
SDO output delay	T_delay_sdo	25pF load, V_{DDIO}=1.2V min			40	ns
CSB setup time	T_setup_csb		20			ns
CSB hold time	T_hold_csb		20			ns

© Bosch Sensortec GmbH reserves all rights even in the event of industrial property rights. We reserve all rights of disposal such as copying and passing on to third parties. BOSCH and the symbol are registered trademarks of Robert Bosch GmbH, Germany.
Note: Specifications within this document are subject to change without notice. Not intended for publication.

6. Pin-out and connection diagram

6.1 Pin-out

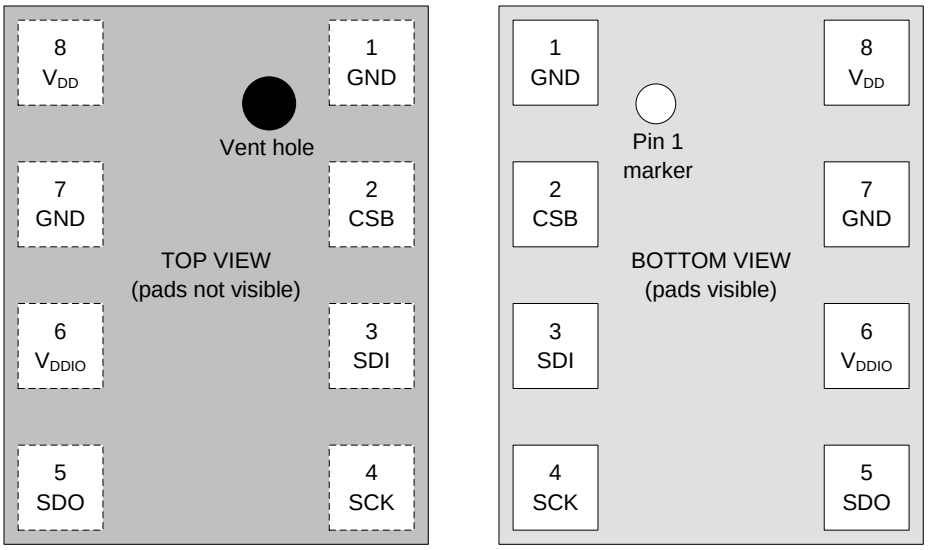

Figure 14: Pin-out top and bottom view

Table 29: Pin description

Pin	Name	I/O Type	Description	Connect to		
				SPI 4W	SPI 3W	I²C
1	GND	Supply	Ground	GND		
2	CSB	In	Chip select	CSB	CSB	V_{DDIO}
3	SDI	In/Out	Serial data input	SDI	SDI/SDO	SDA
4	SCK	In	Serial clock input	SCK	SCK	SCL
5	SDO	In/Out	Serial data output	SDO	DNC	GND for default address
6	V_{DDIO}	Supply	Digital interface supply	V_{DDIO}		
7	GND	Supply	Ground	GND		
8	V_{DD}	Supply	Analog supply	V_{DD}		

© Bosch Sensortec GmbH reserves all rights even in the event of industrial property rights. We reserve all rights of disposal such as copying and passing on to third parties. BOSCH and the symbol are registered trademarks of Robert Bosch GmbH, Germany.
Note: Specifications within this document are subject to change without notice. Not intended for publication.

6.2 Connection diagram 4-wire SPI

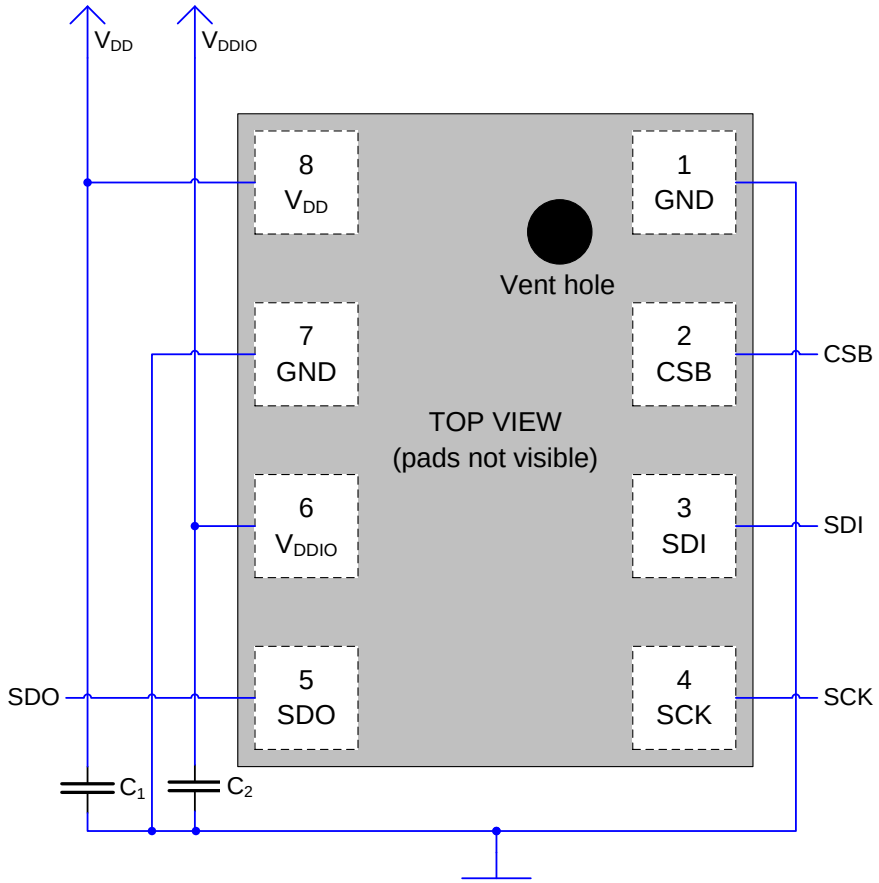

Figure 15: 4-wire SPI connection diagram (Pin1 marking indicated)

Note: the recommended value for C_1, C_2 is 100 nF.

© Bosch Sensortec GmbH reserves all rights even in the event of industrial property rights. We reserve all rights of disposal such as copying and passing on to third parties. BOSCH and the symbol are registered trademarks of Robert Bosch GmbH, Germany.
Note: Specifications within this document are subject to change without notice. Not intended for publication.

6.3 Connection diagram 3-wire SPI

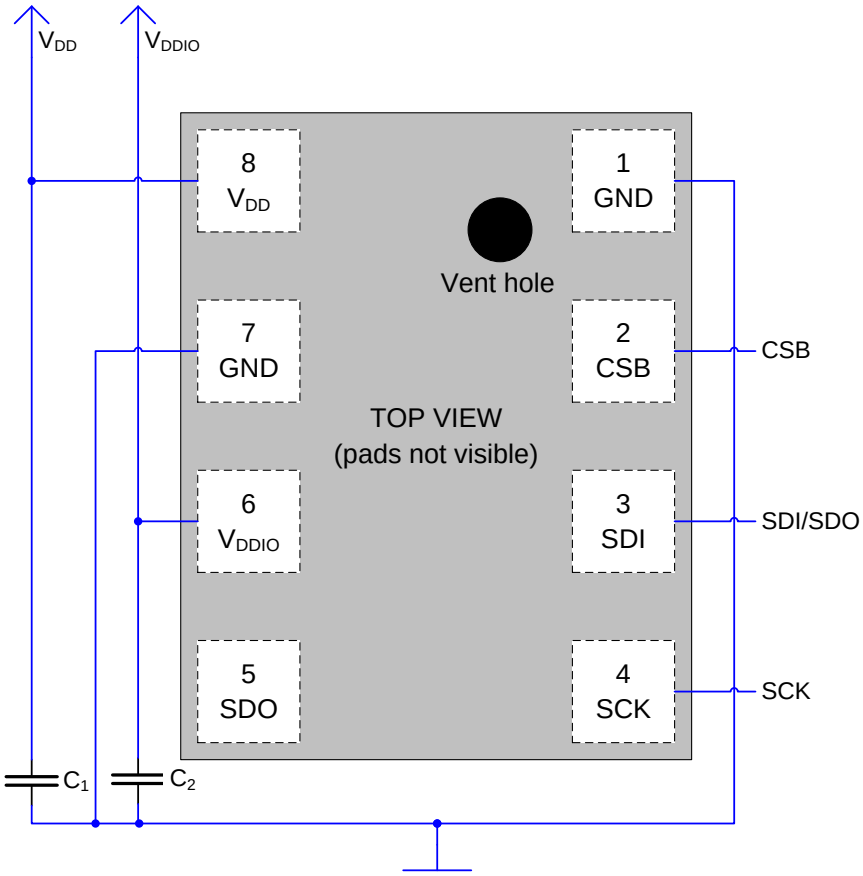

Figure 16: 3-wire SPI connection diagram (Pin1 marking indicated)

Note: the recommended value for C_1, C_2 is 100 nF.

© Bosch Sensortec GmbH reserves all rights even in the event of industrial property rights. We reserve all rights of disposal such as copying and passing on to third parties. BOSCH and the symbol are registered trademarks of Robert Bosch GmbH, Germany.
Note: Specifications within this document are subject to change without notice. Not intended for publication.

6.4 Connection diagram I²C

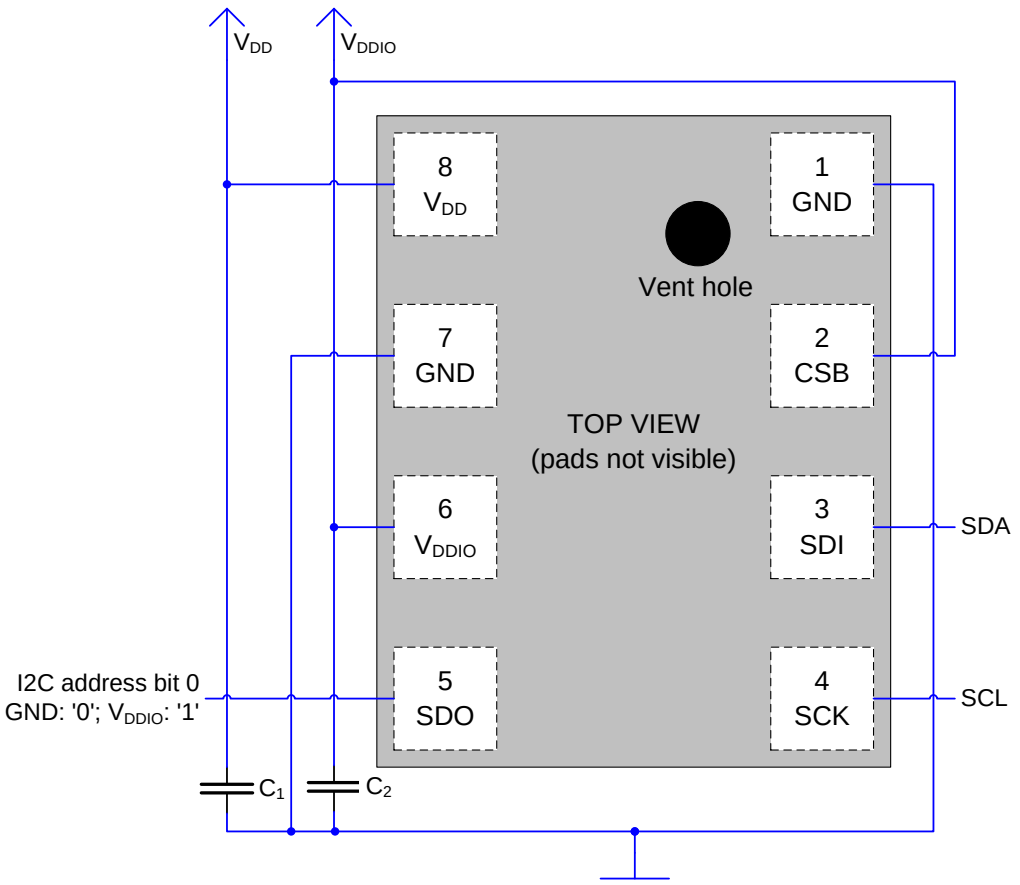

Figure 17: I²C connection diagram (Pin1 marking indicated)

Notes:

- The recommended value for C_1, C_2 is 100 nF.
- A direct connection between CSB and V_{DDIO} is recommended. If CSB is detected as low during startup, the interface will be locked into SPI mode. See chapter 5.1.

© Bosch Sensortec GmbH reserves all rights even in the event of industrial property rights. We reserve all rights of disposal such as copying and passing on to third parties. BOSCH and the symbol are registered trademarks of Robert Bosch GmbH, Germany.
Note: Specifications within this document are subject to change without notice. Not intended for publication.

7. Package, reel and environment

7.1 Outline dimensions

The sensor housing is an 8-pin metal-lid LGA 2.0 × 2.5× 0.95 mm^3 package. Its dimensions are depicted in Figure 18.

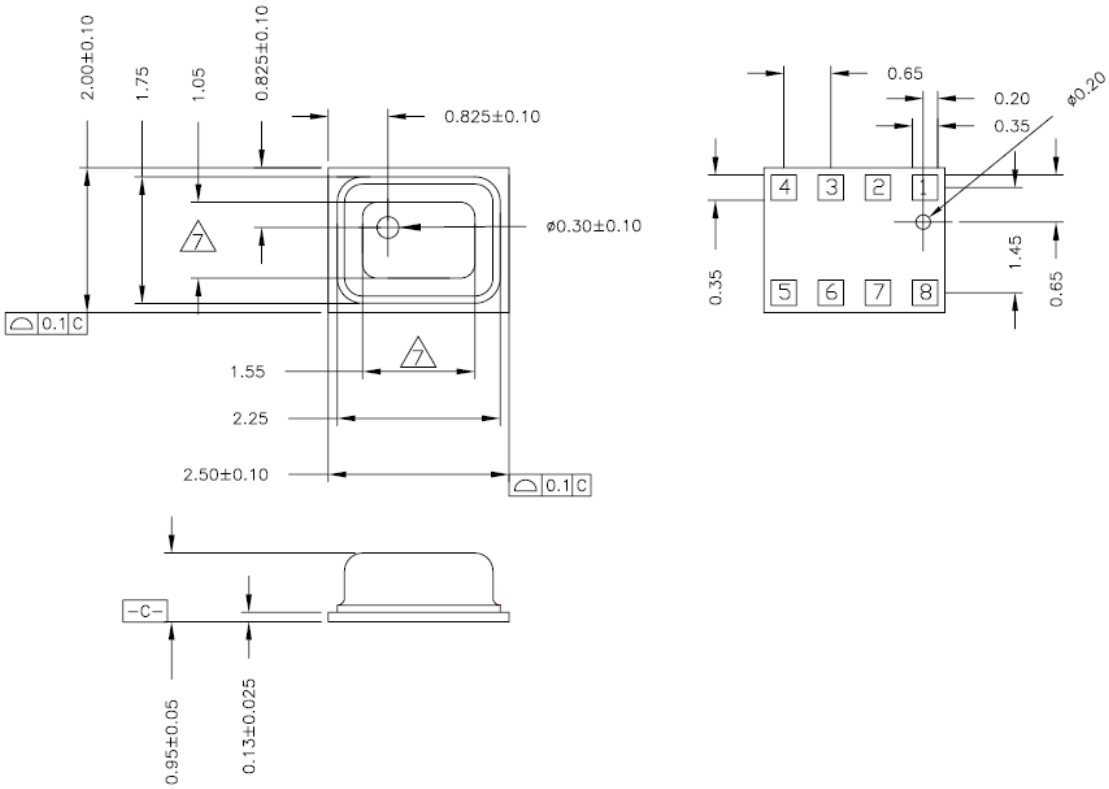

Figure 18: Package outline dimensions for top, bottom and side view

Note: General tolerances are ±50 µm (linear) and ±1° µm (angular)

© Bosch Sensortec GmbH reserves all rights even in the event of industrial property rights. We reserve all rights of disposal such as copying and passing on to third parties. BOSCH and the symbol are registered trademarks of Robert Bosch GmbH, Germany.
Note: Specifications within this document are subject to change without notice. Not intended for publication.

7.2 Landing pattern recommendation

For the design of the landing pattern, the following dimensioning is recommended:

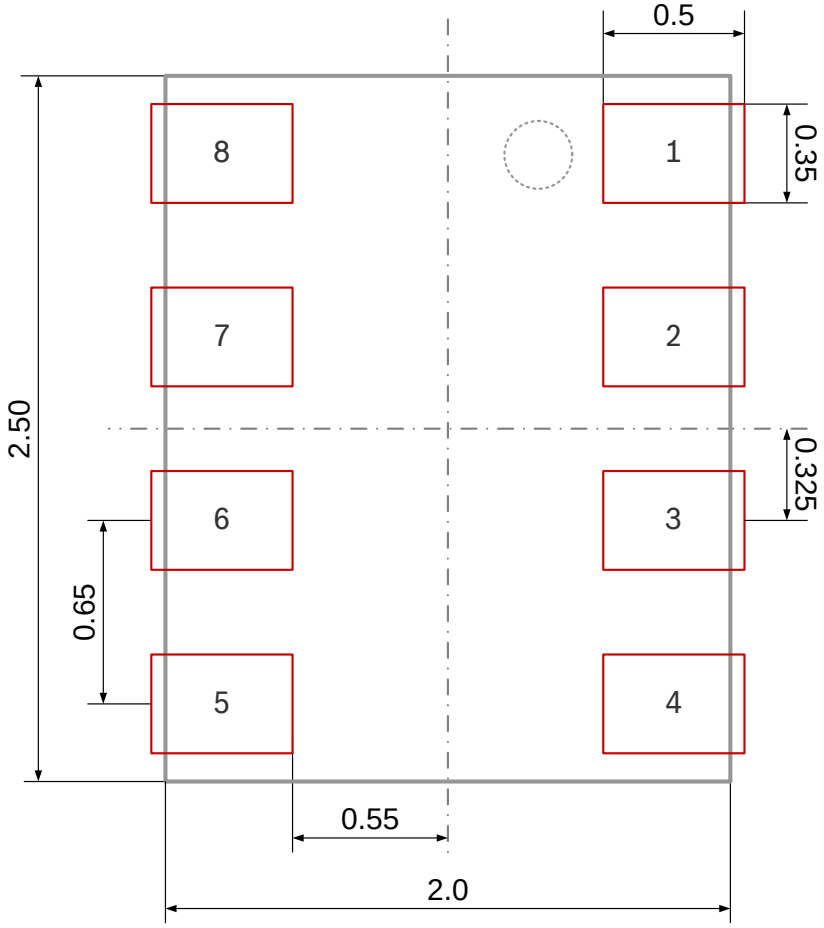

Figure 19: Recommended landing pattern (top view); dimensions are in mm

Note: red areas demark exposed PCB metal pads.

- In case of a solder mask defined (SMD) PCB process, the land dimensions should be defined by solder mask openings. The underlying metal pads are larger than these openings.
- In case of a non solder mask defined (NSMD) PCB process, the land dimensions should be defined in the metal layer. The mask openings are larger than the these metal pads.

© Bosch Sensortec GmbH reserves all rights even in the event of industrial property rights. We reserve all rights of disposal such as copying and passing on to third parties. BOSCH and the symbol are registered trademarks of Robert Bosch GmbH, Germany.
Note: Specifications within this document are subject to change without notice. Not intended for publication.

7.3 Marking

7.3.1 Mass production devices

Table 30: Marking of mass production samples

Labeling	Name	Symbol	Remark
CCC TL ●	Lot counter	CCC	3 alphanumeric digits, variable to generate mass production trace-code
	Product number	T	1 alphanumeric digit, fixed to identify product type, T = “K” “K” is associated with the product BMP280 (part number 0 273 300 354)
	Sub-con ID	L	1 alphanumeric digit, variable to entify sub-con (L = “P”, L = “U”, L = “N”or L = “W”)
	Orientation marker	●	Vent hole

7.3.2 Engineering samples

Table 31: Marking of engineering samples

Labeling	Name	Symbol	Remark
XXN CC ●	Eng. Sample ID	N	1 alphanumeric digit, fixed to identify engineering sample, N = “ * ” or “e” or “E”
	Sample ID	XX	2 alphanumeric digits, variable to generate trace-code
	Counter ID	CC	2 alphanumeric digits, variable to generate trace-code
	Orientation marker	●	Vent hole

© Bosch Sensortec GmbH reserves all rights even in the event of industrial property rights. We reserve all rights of disposal such as copying and passing on to third parties. BOSCH and the symbol are registered trademarks of Robert Bosch GmbH, Germany.
Note: Specifications within this document are subject to change without notice. Not intended for publication.

7.4 Soldering guidelines

The moisture sensitivity level of the BMP280 sensors corresponds to JEDEC Level 1, see also:

- IPC/JEDEC J-STD-020C "Joint Industry Standard: Moisture/Reflow Sensitivity Classification for non-hermetic Solid State Surface Mount Devices"
- IPC/JEDEC J-STD-033A "Joint Industry Standard: Handling, Packing, Shipping and Use of Moisture/Reflow Sensitive Surface Mount Devices".

The sensor fulfils the lead-free soldering requirements of the above-mentioned IPC/JEDEC standard, i.e. reflow soldering with a peak temperature up to 260°C. The minimum height of the solder after reflow shall be at least 50µm. This is required for good mechanical decoupling between the sensor device and the printed circuit board (PCB).

Profile Feature		Pb-Free Assembly
Average Ramp-Up Rate (Ts_{max} to Tp)		3° C/second max.
Preheat – Temperature Min (Ts_{min}) – Temperature Max (Ts_{max}) – Time (ts_{min} to ts_{max})		150 °C 200 °C 60-180 seconds
Time maintained above: – Temperature (T_L) – Time (t_L)		217 °C 60-150 seconds
Peak/Classification Temperature (Tp)		260 °C
Time within 5 °C of actual Peak Temperature (tp)		20-40 seconds
Ramp-Down Rate		6 °C/second max.
Time 25 °C to Peak Temperature		8 minutes max.

Note 1: All temperatures refer to topside of the package, measured on the package body surface.

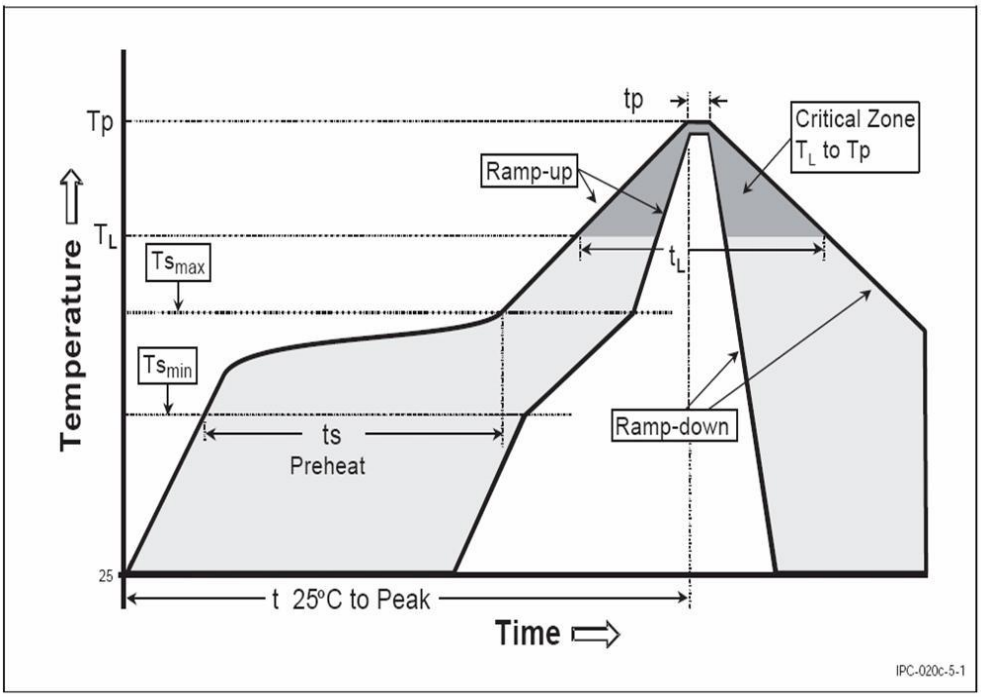

Figure 20: Soldering profile

© Bosch Sensortec GmbH reserves all rights even in the event of industrial property rights. We reserve all rights of disposal such as copying and passing on to third parties. BOSCH and the symbol are registered trademarks of Robert Bosch GmbH, Germany.
Note: Specifications within this document are subject to change without notice. Not intended for publication.

7.5 Tape and reel specification

7.5.1 Dimensions

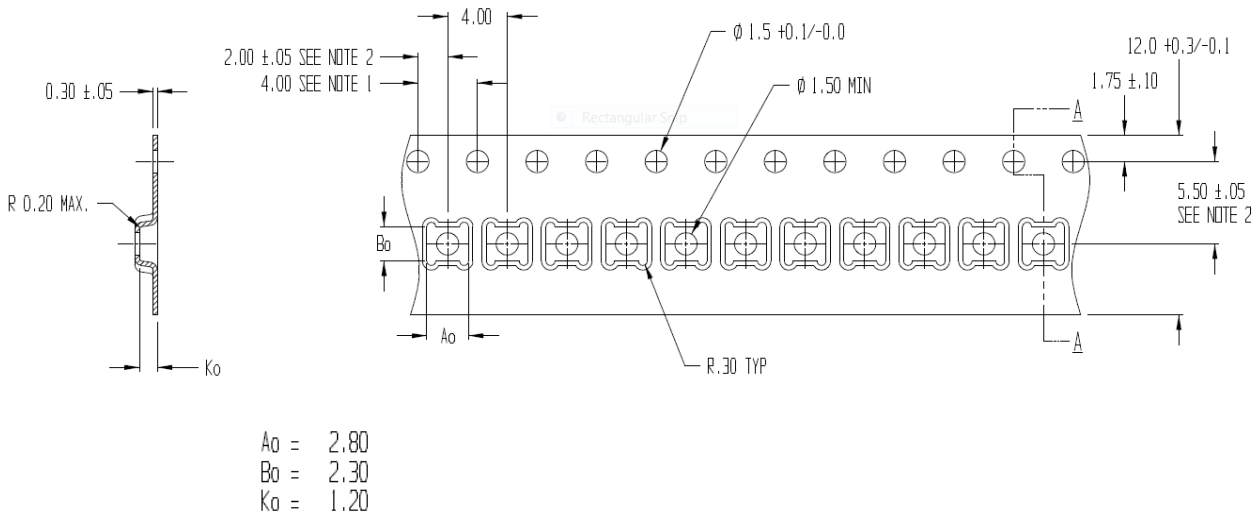

Figure 21: Tape and Reel dimensions

Quantity per reel: 10 kpcs.

7.5.2 Orientation within the reel

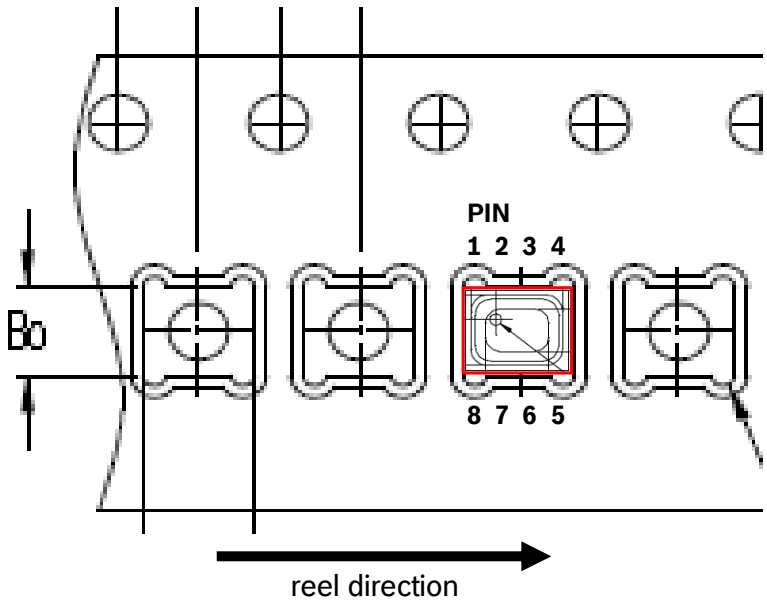

Figure 22: Orientation within tape

© Bosch Sensortec GmbH reserves all rights even in the event of industrial property rights. We reserve all rights of disposal such as copying and passing on to third parties. BOSCH and the symbol are registered trademarks of Robert Bosch GmbH, Germany.
Note: Specifications within this document are subject to change without notice. Not intended for publication.

7.6 Mounting and assembly recommendations

In addition to "Handling, soldering & mounting instructions BMP280", the following recommendations should be taken into consideration when mounting a pressure sensor on a printed-circuit board (PCB):

- The clearance above the metal lid shall be 0.1mm at minimum.
- For the device housing appropriate venting needs to be provided in case the ambient pressure shall be measured.
- Liquids shall not come into direct contact with the device.
- During operation the sensor chip is sensitive to light, which can influence the accuracy of the measurement (photo-current of silicon). The position of the vent hole minimizes the light exposure of the sensor chip. Nevertheless, BST recommends to avoid the exposure of BMP280 to strong light sources.
- Soldering may not be done using vapor phase processes since the sensor might be damaged.

7.7 Environmental safety

7.7.1 RoHS

The BMP280 sensor meets the requirements of the EC restriction of hazardous substances (RoHS) directive, see also:

Directive 2011/65/EU of the European Parliament and of the Council of 8 June 2011 on the restriction of the use of certain hazardous substances in electrical and electronic equipment.

7.7.2 Halogen content

The BMP280 is halogen-free. For more details on the analysis results please contact your Bosch Sensortec representative.

7.7.3 Internal package structure

Within the scope of Bosch Sensortec's ambition to improve its products and secure the mass product supply, Bosch Sensortec qualifies additional sources (e.g. 2nd source) for the LGA package of the BMP280.

While Bosch Sensortec took care that all of the technical packages parameters are described above are 100% identical for all sources, there can be differences in the chemical content and the internal structural between the different package sources.

However, as secured by the extensive product qualification process of Bosch Sensortec, this has no impact to the usage or to the quality of the BMP280 product.

8. Appendix 1: Computation formulae for 32 bit systems

8.1 Compensation formula in floating point

Please note that it is strongly advised to use the API available from Bosch Sensortec to perform readout and compensation. If this is not wanted, the code below can be applied at the user's risk. Both pressure and temperature values are expected to be received in 20 bit format, positive, stored in a 32 bit signed integer.

© Bosch Sensortec GmbH reserves all rights even in the event of industrial property rights. We reserve all rights of disposal such as copying and passing on to third parties. BOSCH and the symbol are registered trademarks of Robert Bosch GmbH, Germany.
Note: Specifications within this document are subject to change without notice. Not intended for publication.

The variable t_fine (signed 32 bit) carries a fine resolution temperature value over to the pressure compensation formula and could be implemented as a global variable.

The data type “BMP280_S32_t” should define a 32 bit signed integer variable type and could usually be defined as “long signed int”. The revision of the code is rev.1.1.

```
// Returns temperature in DegC, double precision. Output value of “51.23” equals 51.23 DegC.
// t_fine carries fine temperature as global value
BMP280_S32_t t_fine;
double bmp280_compensate_T_double(BMP280_S32_t adc_T)
{
   double var1, var2, T;
   var1  = (((double)adc_T)/16384.0 - ((double)dig_T1)/1024.0) * ((double)dig_T2);
   var2  = ((((double)adc_T)/131072.0 - ((double)dig_T1)/8192.0) *
      (((double)adc_T)/131072.0 - ((double) dig_T1)/8192.0)) * ((double)dig_T3);
   t_fine = (BMP280_S32_t)(var1 + var2);
   T  = (var1 + var2) / 5120.0;
   return T;
}

// Returns pressure in Pa as double. Output value of “96386.2” equals 96386.2 Pa = 963.862 hPa
double bmp280_compensate_P_double(BMP280_S32_t adc_P)
{
   double var1, var2, p;
   var1 = ((double)t_fine/2.0) - 64000.0;
   var2 = var1 * var1 * ((double)dig_P6) / 32768.0;
   var2 = var2 + var1 * ((double)dig_P5) * 2.0;
   var2 = (var2/4.0)+(((double)dig_P4) * 65536.0);
   var1 = (((double)dig_P3) * var1 * var1 / 524288.0 + ((double)dig_P2) * var1) / 524288.0;
   var1 = (1.0 + var1 / 32768.0)*((double)dig_P1);
   if (var1 == 0.0)
   {
      return 0; // avoid exception caused by division by zero
   }
   p = 1048576.0 - (double)adc_P;
   p = (p - (var2 / 4096.0)) * 6250.0 / var1;
   var1 = ((double)dig_P9) * p * p / 2147483648.0;
   var2 = p * ((double)dig_P8) / 32768.0;
   p = p + (var1 + var2 + ((double)dig_P7)) / 16.0;
   return p;
}
```

8.2 Compensation formula in 32 bit fixed point

Please note that it is strongly advised to use the API available from Bosch Sensortec to perform readout and compensation. If this is not wanted, the code below can be applied at the user’s risk. Both pressure and temperature values are expected to be received in 20 bit format, positive, stored in a 32 bit signed integer.

The variable t_fine (signed 32 bit) carries a fine resolution temperature value over to the pressure compensation formula and could be implemented as a global variable.
The data type “BMP280_S32_t” should define a 32 bit signed integer variable type and can usually be defined as “long signed int”.

The data type “BMP280_U32_t” should define a 32 bit unsigned integer variable type and can usually be defined as “long unsigned int”.
Compensating the pressure value with 32 bit integer has an accuracy of typically 1 Pa (1-sigma). At very high filter levels this adds a noticeable amount of noise to the output values and reduces their resolution.

```
// Returns temperature in DegC, resolution is 0.01 DegC. Output value of “5123” equals 51.23 DegC.
// t_fine carries fine temperature as global value
BMP280_S32_t t_fine;
BMP280_S32_t bmp280_compensate_T_int32(BMP280_S32_t adc_T)
{
   BMP280_S32_t var1, var2, T;
```


© Bosch Sensortec GmbH reserves all rights even in the event of industrial property rights. We reserve all rights of disposal such as copying and passing on to third parties. BOSCH and the symbol are registered trademarks of Robert Bosch GmbH, Germany.
Note: Specifications within this document are subject to change without notice. Not intended for publication.

```
    var1  = ((((adc_T>>3) - ((BMP280_S32_t)dig_T1<<1))) * ((BMP280_S32_t)dig_T2)) >> 11;
    var2  = (((((adc_T>>4) - ((BMP280_S32_t)dig_T1)) * ((adc_T>>4) - ((BMP280_S32_t)dig_T1))) >> 12) *
        ((BMP280_S32_t)dig_T3)) >> 14;
    t_fine = var1 + var2;
    T  = (t_fine * 5 + 128) >> 8;
    return T;
}

// Returns pressure in Pa as unsigned 32 bit integer. Output value of "96386" equals 96386 Pa = 963.86 hPa
BMP280_U32_t bmp280_compensate_P_int32(BMP280_S32_t adc_P)
{
    BMP280_S32_t var1, var2;
    BMP280_U32_t p;
    var1 = (((BMP280_S32_t)t_fine)>>1) - (BMP280_S32_t)64000;
    var2 = (((var1>>2) * (var1>>2)) >> 11 ) * ((BMP280_S32_t)dig_P6);
    var2 = var2 + ((var1*((BMP280_S32_t)dig_P5))<<1);
    var2 = (var2>>2)+(((BMP280_S32_t)dig_P4)<<16);
    var1 = (((dig_P3 * (((var1>>2) * (var1>>2)) >> 13 )) >> 3) + ((((BMP280_S32_t)dig_P2) * var1)>>1))>>18;
    var1 =((((32768+var1))*((BMP280_S32_t)dig_P1))>>15);
    if (var1 == 0)
    {
        return 0; // avoid exception caused by division by zero
    }
    p = (((BMP280_U32_t)(((BMP280_S32_t)1048576)-adc_P)-(var2>>12)))*3125;
    if (p < 0x80000000)
    {
        p = (p << 1) / ((BMP280_U32_t)var1);
    }
    else
    {
        p = (p / (BMP280_U32_t)var1) * 2;
    }
    var1 = (((BMP280_S32_t)dig_P9) * ((BMP280_S32_t)(((p>>3) * (p>>3))>>13)))>>12;
    var2 = (((BMP280_S32_t)(p>>2)) * ((BMP280_S32_t)dig_P8))>>13;
    p = (BMP280_U32_t)((BMP280_S32_t)p + ((var1 + var2 + dig_P7) >> 4));
    return p;
}
```


© Bosch Sensortec GmbH reserves all rights even in the event of industrial property rights. We reserve all rights of disposal such as copying and passing on to third parties. BOSCH and the symbol are registered trademarks of Robert Bosch GmbH, Germany.
Note: Specifications within this document are subject to change without notice. Not intended for publication.

9. Legal disclaimer

9.1 Engineering samples

Engineering Samples are marked with an asterisk (*) or (e) or (E). Samples may vary from the valid technical specifications of the product series contained in this data sheet. They are therefore not intended or fit for resale to third parties or for use in end products. Their sole purpose is internal client testing. The testing of an engineering sample may in no way replace the testing of a product series. Bosch Sensortec assumes no liability for the use of engineering samples. The Purchaser shall indemnify Bosch Sensortec from all claims arising from the use of engineering samples.

9.2 Product use

Bosch Sensortec products are developed for the consumer goods industry. They are not designed or approved for use in military applications, life-support appliances, safety-critical automotive applications and devices or systems where malfunctions of these products can reasonably be expected to result in personal injury. They may only be used within the parameters of this product data sheet.
The resale and/or use of products are at the Purchaser's own risk and the Purchaser's own responsibility.
The Purchaser shall indemnify Bosch Sensortec from all third party claims arising from any product use not covered by the parameters of this product data sheet or not approved by Bosch Sensortec and reimburse Bosch Sensortec for all costs in connection with such claims.
The Purchaser accepts the responsibility to monitor the market for the purchased products, particularly with regard to product safety, and inform Bosch Sensortec without delay of any security relevant incidents.

9.3 Application examples and hints

With respect to any examples or hints given herein, any typical values stated herein and/or any information regarding the application of the device, Bosch Sensortec hereby disclaims any and all warranties and liabilities of any kind, including without limitation warranties of non-infringement of intellectual property rights or copyrights of any third party. The information given in this document shall in no event be regarded as a guarantee of conditions or characteristics. They are provided for illustrative purposes only and no evaluation regarding infringement of intellectual property rights or copyrights or regarding functionality, performance or error has been made.

© Bosch Sensortec GmbH reserves all rights even in the event of industrial property rights. We reserve all rights of disposal such as copying and passing on to third parties. BOSCH and the symbol are registered trademarks of Robert Bosch GmbH, Germany.
Note: Specifications within this document are subject to change without notice. Not intended for publication.

10. Document history and modification

Rev. No	Chapter	Description of modification/changes	Date
0.1		Document creation	2012-08-06
1.0	9.2	Change of product use	2013-11-26
	Table 2	Update of min/max data (only for restricted version)	
		Added comment on the sampling rate	
1.1	1, 3.3.1	Changed value for resolution, values for *osrs_p* settings changed	2014-02-10
	5.2	Changed sentence and added drawing	2014-02-18
	3.7	Added max values for current consumption	2014-05-08
1.11	4.5.3	Modified write in normal mode	2014-06-25
	5.2	Modified SDI/SCK ESD drawing	
1.12	1	Changed min/max values for standby current, only valid for 25 °C	2014-07-12
	Table 1	Pressure resolution 0.16Pa	2014-07-12
1.13	Page 2	New technical reference codes added	2014-11-12
	7.3	New details about laser marking added	
1.14	Table 6	Changed contents of table	2015-05-04
	Page 1	Removed TRC 0 273 300 354 & 0273 300 391	
	Page 44	Updated RoHS directive to 2011/65/EU effective 8 June 2011	2015-05-07

Bosch Sensortec GmbH
Gerhard-Kindler-Strasse 8
72770 Reutlingen / Germany

contact@bosch-sensortec.com
www.bosch-sensortec.com

Modifications reserved | Printed in Germany
Specifications subject to change without notice
Document number: BST-BMP280-DS001-11
Revision_1.14_052015

© Bosch Sensortec GmbH reserves all rights even in the event of industrial property rights. We reserve all rights of disposal such as copying and passing on to third parties. BOSCH and the symbol are registered trademarks of Robert Bosch GmbH, Germany.
Note: Specifications within this document are subject to change without notice. Not intended for publication.

© Bosch Sensortec GmbH reserves all rights even in the event of industrial property rights. We reserve all rights of disposal such as copying and passing on to third parties. BOSCH and the symbol are registered trademarks of Robert Bosch GmbH, Germany.
Note: Specifications within this document are subject to change without notice. Not intended for publication.