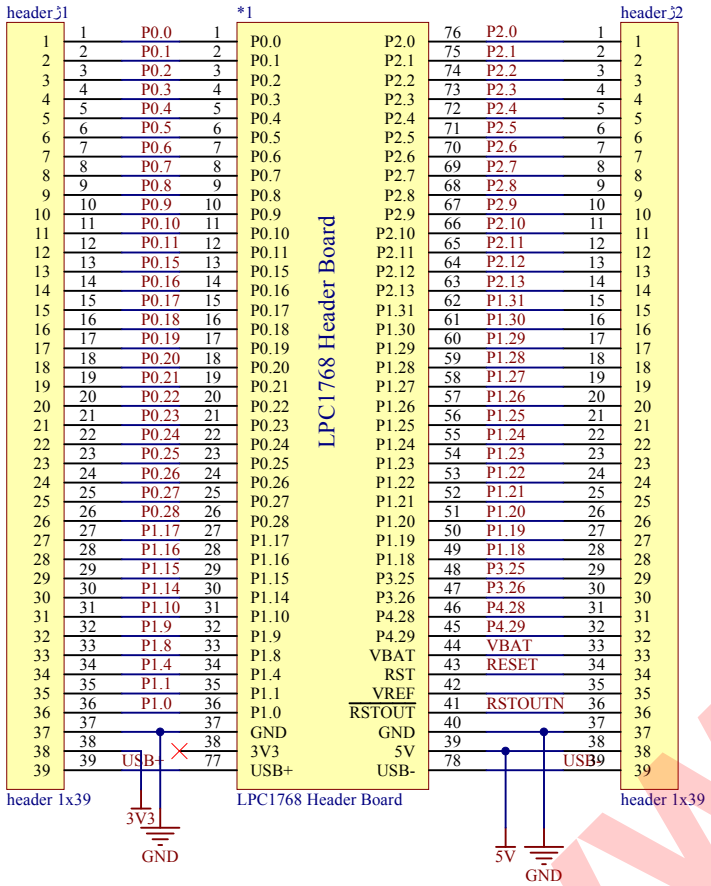
header 1x39
LPC1768 Header Board
header 1x39
3V3
GND
5V
GND
USB+
USB-

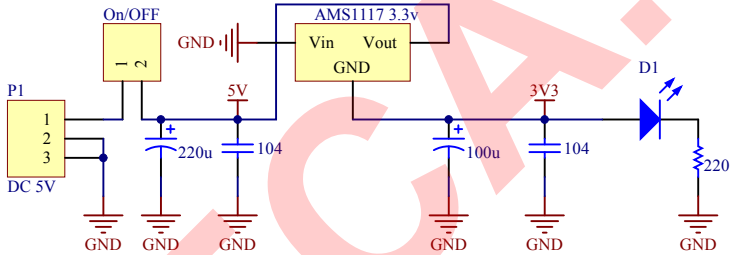
On/OFF
GND
AMS1117 3.3v
Vin
Vout
GND
P1
DC 5V
5V
220u
104
3V3
100u
104
D1
220
GND

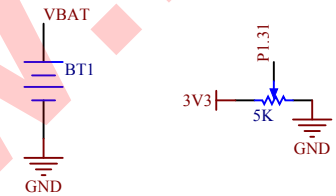
VBAT
BT1
GND
P1.31
3V3
5K
GND

www.ECA.ir

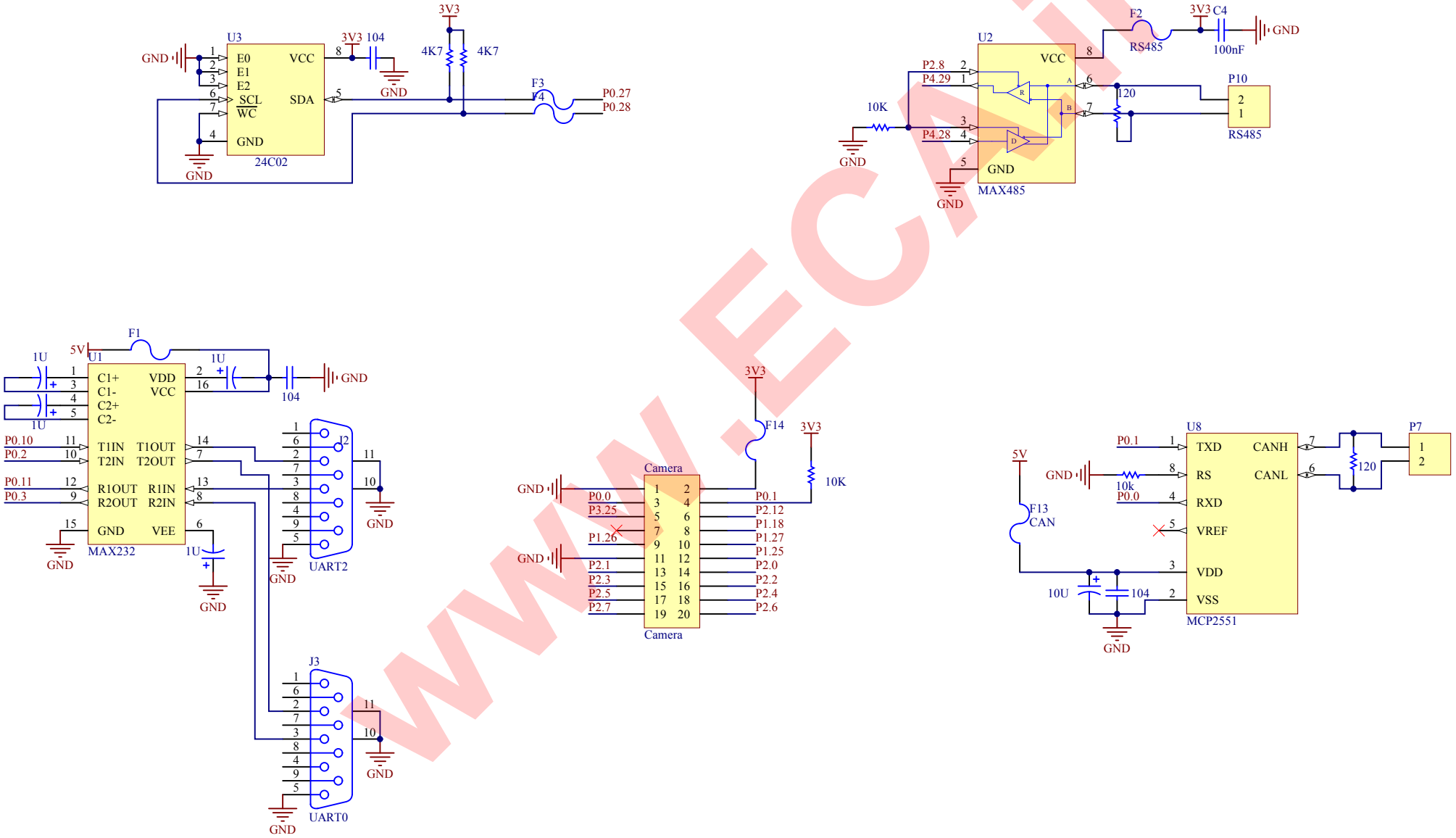
U3
E0
E1
E2
SCL
WC
GND
VCC
SDA
GND
24C02
3V3
104
4K7
4K7
F3
F4
P0.27
P0.28
U2
VCC
P2.8
P4.29
P4.28
GND
MAX485
10K
F2
RS485
3V3
C4
100nF
120
P10
RS485
U1
5V
F1
C1+
C1-
C2+
C2-
VDD
VCC
T1IN
T2IN
T1OUT
T2OUT
R1OUT
R2OUT
R1IN
R2IN
GND
VEE
MAX232
1U
104
UART2
J3
UART0
Camera
P0.0
P3.25
P1.26
P2.1
P2.3
P2.5
P2.7
P0.1
P2.12
P1.18
P1.27
P1.25
P2.0
P2.2
P2.4
P2.6
F14
U8
TXD
RS
RXD
VREF
VDD
VSS
CANH
CANL
MCP2551
P0.1
P0.0
10k
F13
CAN
10U
P7
120
www.ECAir

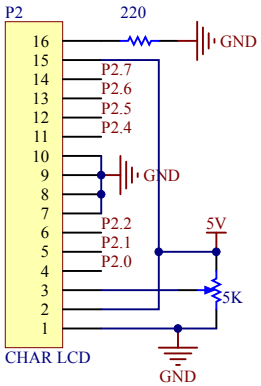
P2
220
GND
16
15
14
13
12
11
10
9
8
7
6
5
4
3
2
1
P2.7
P2.6
P2.5
P2.4
GND
P2.2
P2.1
P2.0
5V
5K
CHAR LCD
GND

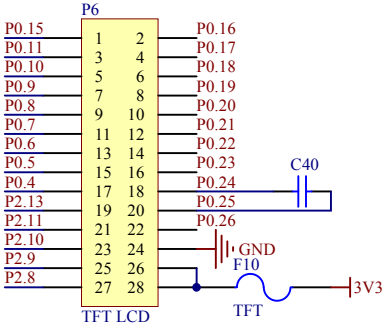
P6
P0.15
P0.11
P0.10
P0.9
P0.8
P0.7
P0.6
P0.5
P0.4
P2.13
P2.11
P2.10
P2.9
P2.8
1 2
3 4
5 6
7 8
9 10
11 12
13 14
15 16
17 18
19 20
21 22
23 24
25 26
27 28
P0.16
P0.17
P0.18
P0.19
P0.20
P0.21
P0.22
P0.23
P0.24
P0.25
P0.26
C40
GND
F10
3V3
TFT
TFT LCD

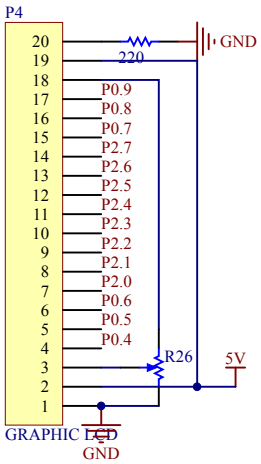
P4
20
19
18
17
16
15
14
13
12
11
10
9
8
7
6
5
4
3
2
1
220
GND
P0.9
P0.8
P0.7
P2.7
P2.6
P2.5
P2.4
P2.3
P2.2
P2.1
P2.0
P0.6
P0.5
P0.4
R26
5V
GRAPHIC LCD
GND

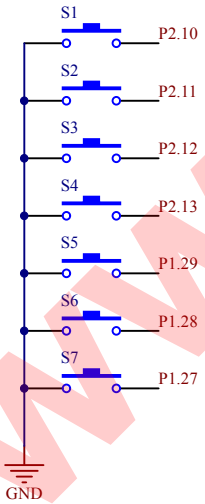
S1
S2
S3
S4
S5
S6
S7
P2.10
P2.11
P2.12
P2.13
P1.29
P1.28
P1.27
GND

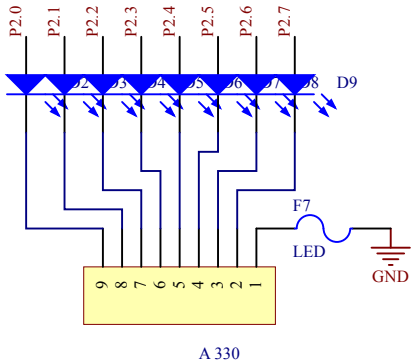
P2.0
P2.1
P2.2
P2.3
P2.4
P2.5
P2.6
P2.7
D9
F7
LED
GND
9
8
7
6
5
4
3
2
1
A 330

www.ECA.ir

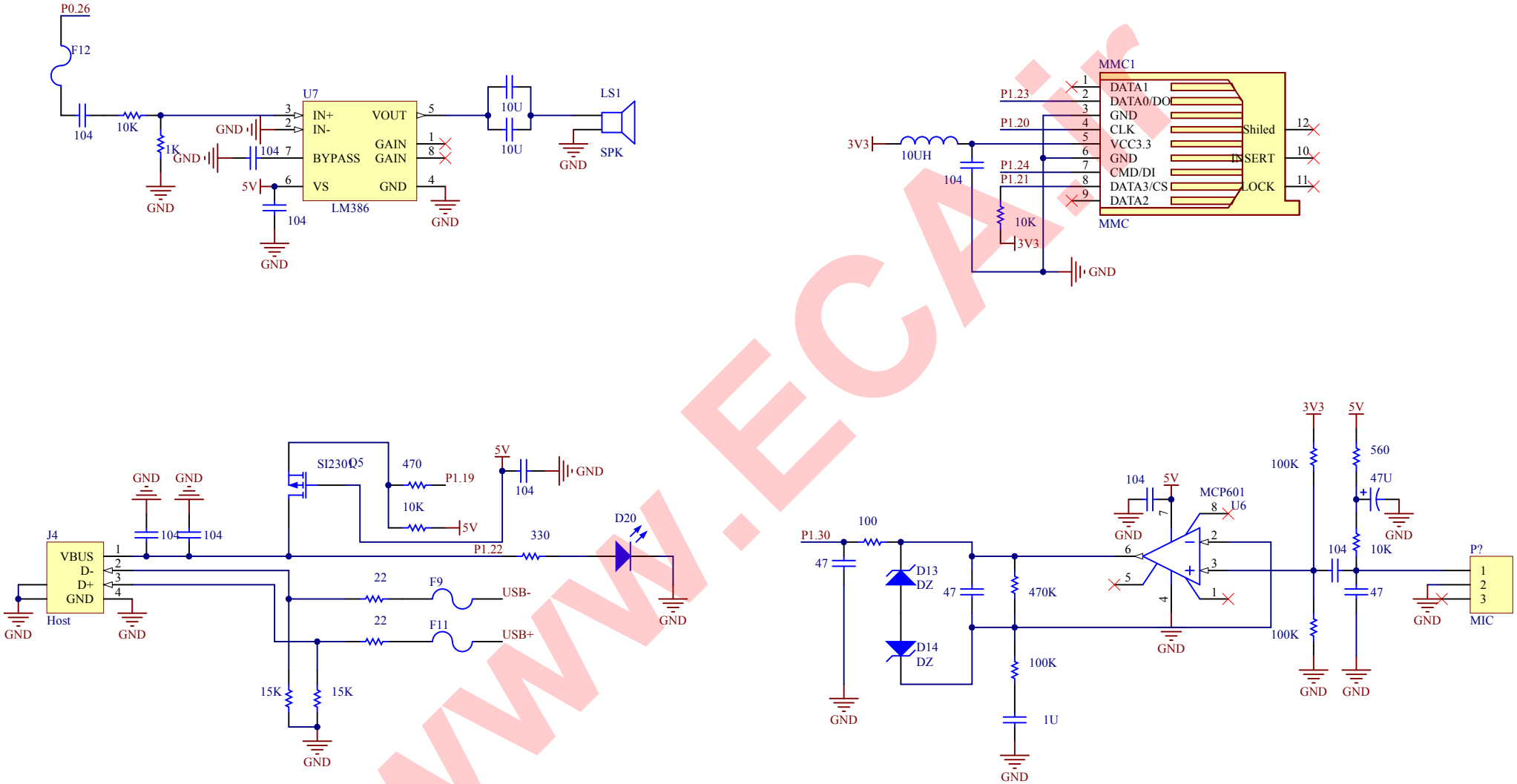
P0.26
F12
104
10K
1K
GND
U7
IN+
IN-
BYPASS
VS
VOUT
GAIN
GAIN
GND
LM386
5V
10U
LS1
SPK
MMC1
DATA1
DATA0/DO
GND
CLK
VCC3.3
GND
CMD/DI
DATA3/CS
DATA2
Shiled
INSERT
LOCK
MMC
P1.23
P1.20
P1.24
P1.21
3V3
10UH
10K
SI230Q5
470
P1.19
P1.22
330
D20
J4
VBUS
D-
D+
GND
Host
22
F9
F11
USB-
USB+
15K
P1.30
100
47
D13
DZ
D14
DZ
470K
1U
MCP601
U6
560
47U
MIC
P?

www.ECA.ir

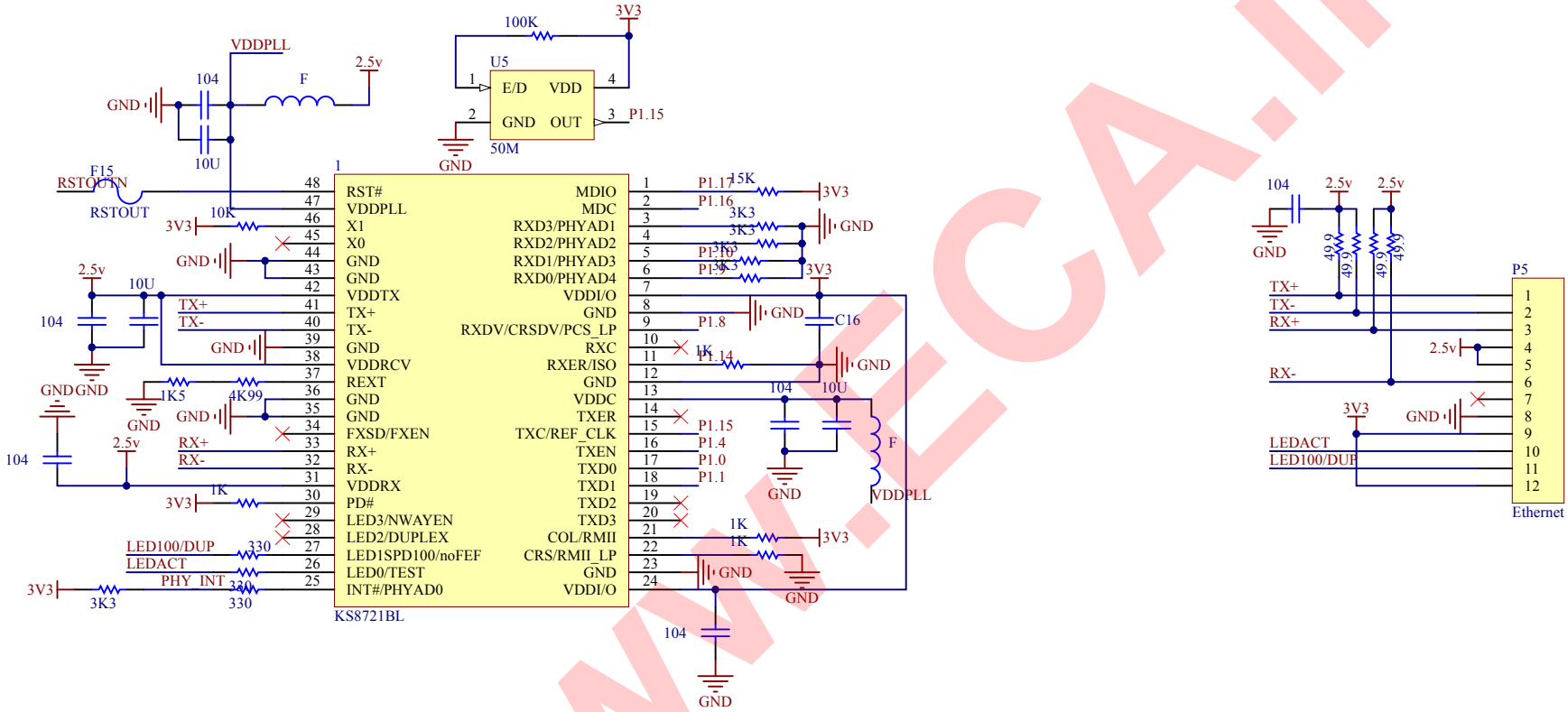
U5
E/D
VDD
GND
OUT
50M
100K
3V3
P1.15
VDDPLL
2.5v
104
F
GND
10U
F15
RSTOUTN
RSTOUT
10K
KS8721BL
RST#
VDDPLL
X1
X0
GND
VDDTX
TX+
TX-
VDDRCV
REXT
FXSD/FXEN
RX+
RX-
VDDRX
PD#
LED3/NWAYEN
LED2/DUPLEX
LED1SPD100/noFEF
LED0/TEST
INT#/PHYAD0
MDIO
MDC
RXD3/PHYAD1
RXD2/PHYAD2
RXD1/PHYAD3
RXD0/PHYAD4
VDDI/O
RXDV/CRSDV/PCS_LP
RXC
RXER/ISO
VDDC
TXER
TXC/REF_CLK
TXEN
TXD0
TXD1
TXD2
TXD3
COL/RMII
CRS/RMII_LP
P1.17
P1.16
P1.8
P1.14
P1.4
P1.0
P1.1
15K
3K3
C16
1K
1K5
4K99
330
LED100/DUP
LEDACT
PHY_INT
3K3
P5
Ethernet
49.9

www.ECA.ir

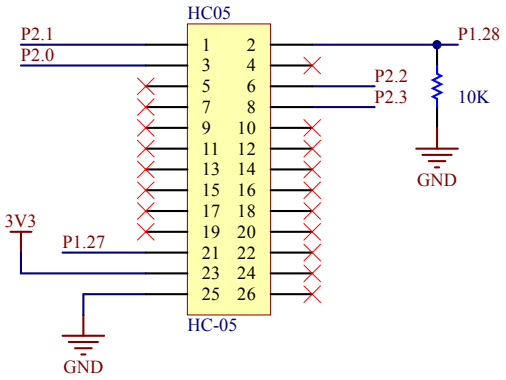
HC05
P2.1
P2.0
P1.28
P2.2
P2.3
10K
GND
3V3
P1.27
GND
HC-05

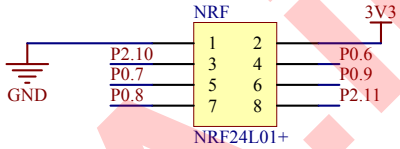
NRF
3V3
GND
P2.10
P0.7
P0.8
P0.6
P0.9
P2.11
NRF24L01+

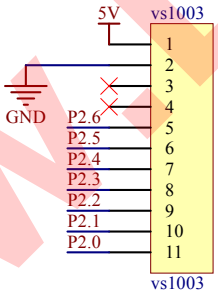
5V
vs1003
GND
P2.6
P2.5
P2.4
P2.3
P2.2
P2.1
P2.0
vs1003

www.ECA.ir