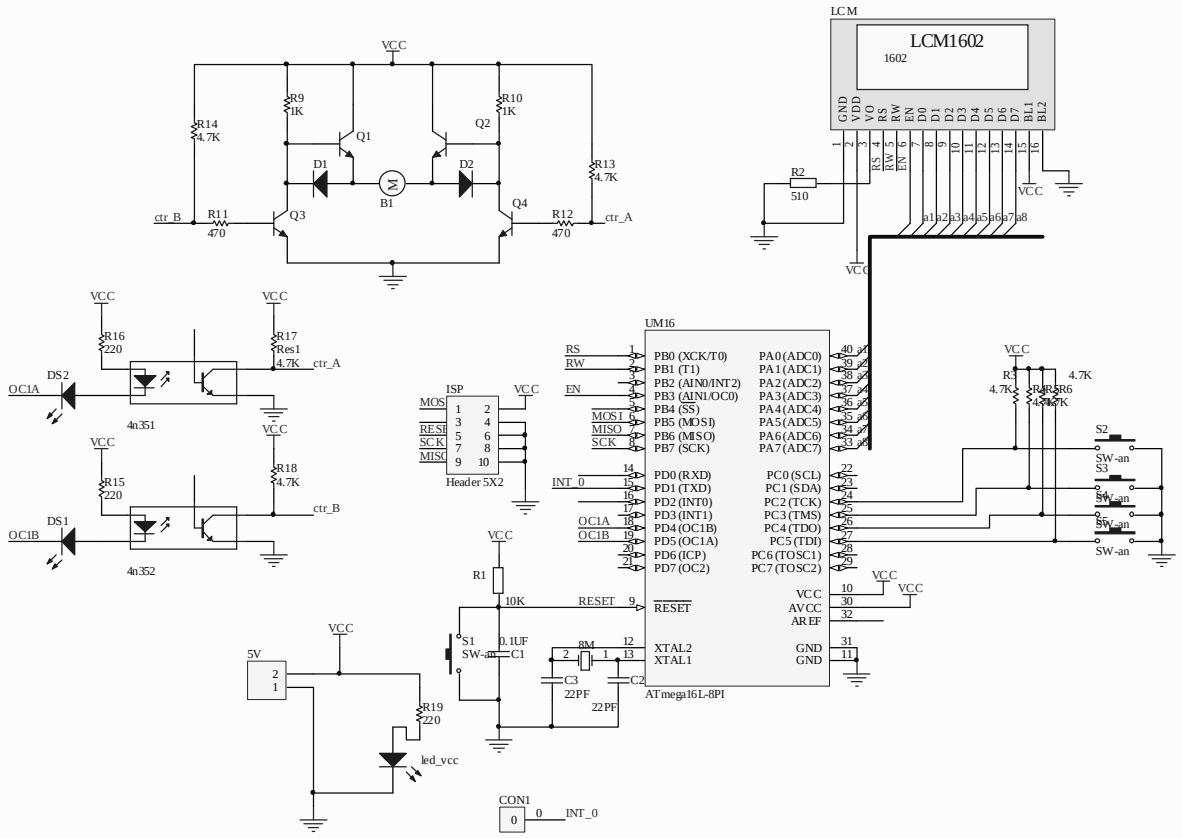


| Title | | |
|---|---|---|
| Size A3 | Number | Revision |
| Date: 2007-6-15 | Sheet of | |
| File: F:\PROTEL电路图\..\avr实验板.SCHDOC | Drawn By: | |