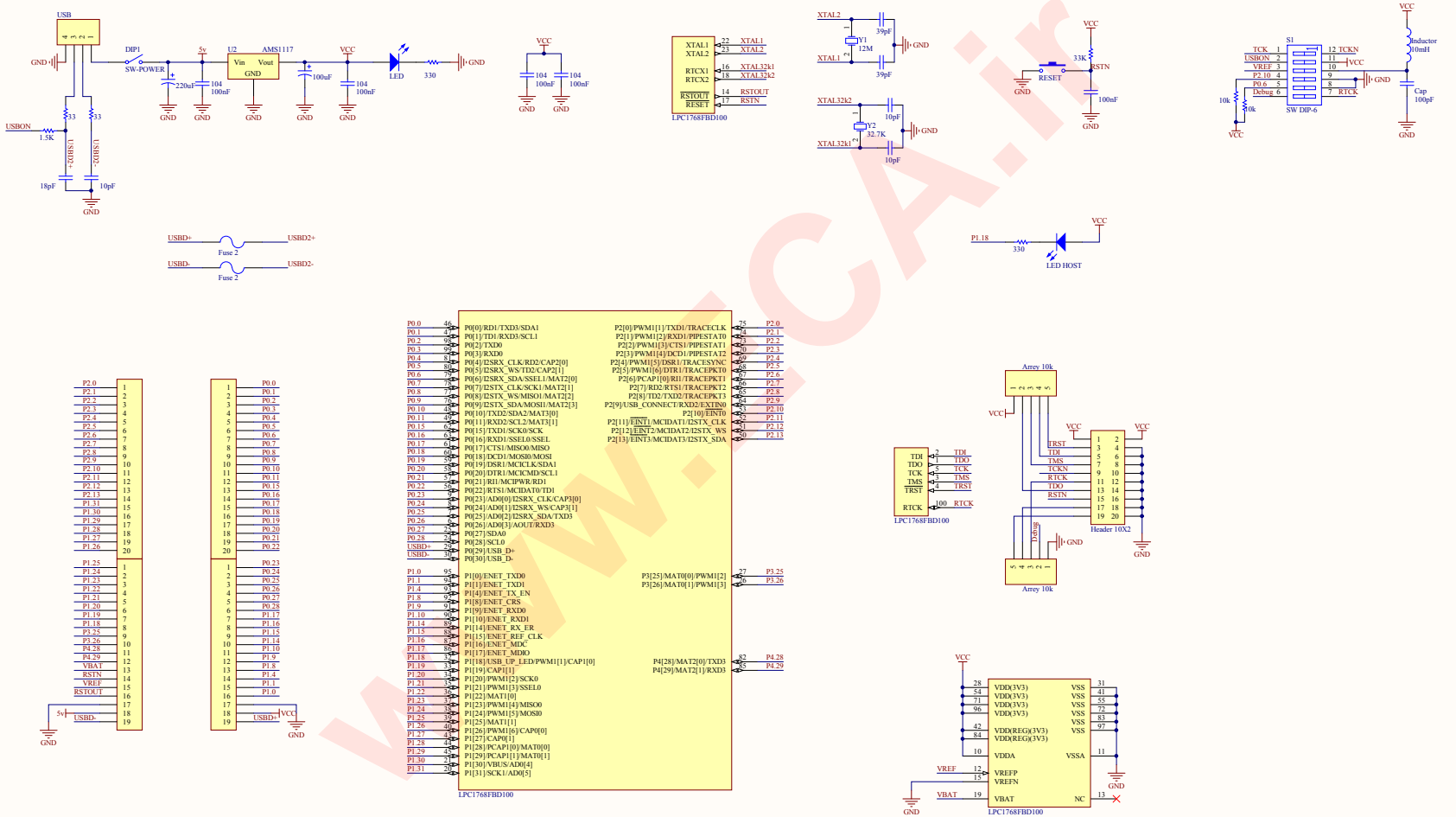

Title		
Size: C	Number	Revision
Date: 2013/04/03		Sheet of
File: O:\EH000\..\1768hb.SchDoc		Drawn By:

www.ICA.ir