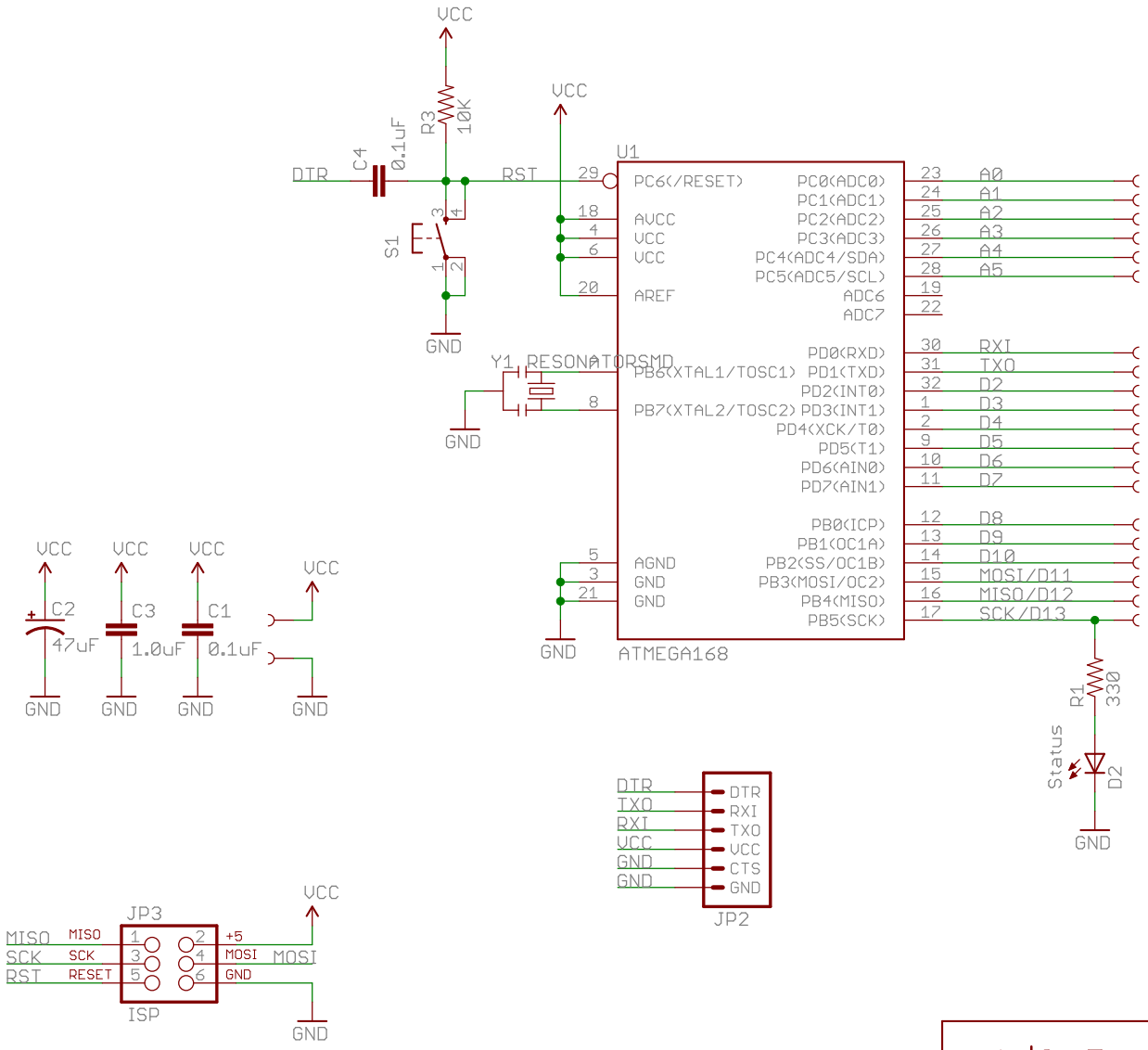

Released under the Creative Commons Attribution Share-Alike 3.0 License
http://creativecommons.org/licenses/by-sa/3.0

Designed by:
L. Buechley
N. Seidle

LilyPad - MainBoard

TITLE: Mainboard-v18	LillyPad
Document Number: Spark Fun Electronics	REV:
Date: 10/16/2008 9:50:54 PM	Sheet: 1/1